United States
Department of
Agriculture

Marketing and
Regulatory
Programs

Grain Inspection,
Packers and
Stockyards
Administration

Federal Grain
Inspection
Service

Washington, D.C.

August 3, 2016

Equipment Handbook

United States Department of Agriculture
Grain Inspection, Packers and Stockyards Administration
Federal Grain Inspection Service

Program Handbook

August 3, 2016

Equipment Handbook

Foreword

This Handbook sets forth the policies and procedures regarding the installation, alignment, standardization, calibration, examination, and testing of equipment used in sampling and inspection activities. The procedures contained in this Handbook are applicable to all Federal Grain Inspection Service (FGIS) Headquarters units, FGIS Field Offices, sub-offices and agencies. (Procedures governing the operation of such equipment are established by Book II, “Grain Inspection Handbook,” and the “Rice Inspection Handbook.”) Moisture meters, near infrared analyzers, falling number apparatuses, aflatoxin equipment, etc., are covered by separate handbooks and instructions.

The Field Management Division (FMD) and Technology and Science Division (TSD) are responsible for the management and administration of the FGIS equipment program.

/s/Patrick Mc Cluskey

Patrick McCluskey, Chief
Policies, Procedures, and Market Analysis Branch

In accordance with Federal civil rights law and U.S. Department of Agriculture (USDA) civil rights regulations and policies, the USDA, its Agencies, offices, and employees, and institutions participating in or administering USDA programs are prohibited from discriminating based on race, color, national origin, religion, sex, gender identity (including gender expression), sexual orientation, disability, age, marital status, family/parental status, income derived from a public assistance program, political beliefs, or reprisal or retaliation for prior civil rights activity, in any program or activity conducted or funded by USDA (not all bases apply to all programs). Remedies and complaint filing deadlines vary by program or incident.

Persons with disabilities who require alternative means of communication for program information (e.g., Braille, large print, audiotape, American Sign Language, etc.) should contact the responsible Agency or USDA’s TARGET Center at (202) 720-2600 (voice and TTY) or contact USDA through the Federal Relay Service at (800) 877-8339. Additionally, program information may be made available in languages other than English.

To file a program discrimination complaint, complete the USDA Program Discrimination Complaint Form, AD-3027, found online at How to File a Program Discrimination Complaint and at any USDA office or write a letter addressed to USDA and provide in the letter all of the information requested in the form. To request a copy of the complaint form, call (866) 632-9992. Submit your completed form or letter to USDA by: (1) mail: U.S. Department of Agriculture, Office of the Assistant Secretary for Civil Rights, 1400 Independence Avenue, SW, Washington, D.C. 20250-9410; (2) fax: (202) 690-7442; or (3) email: program.intake@usda.gov.

USDA is an equal opportunity provider, employer, and lender.

TABLE OF CONTENTS

CHAPTER 1 GENERAL INFORMATION

CHAPTER 2 GRAIN TEST SCALES

CHAPTER 3 LABORATORY ENVIRONMENT

CHAPTER 4 DOCKAGE TESTERS

CHAPTER 5 TEST WEIGHT PER BUSHEL APPARATUSES

CHAPTER 6 RICE EQUIPMENT

CHAPTER 7 MANUAL SAMPLING DEVICES

CHAPTER 8 BARLEY PEARLERS

CHAPTER 9 SIEVES

CHAPTER 10 REVISION HISTORY

CHAPTER 1
GENERAL INFORMATION

Contents

1.1 POLICY 2

1.2 RESPONSIBILITIES 4

1.3 RECORD KEEPING REQUIREMENTS 7

1.4 EQUIPMENT IDENTIFICATION 7

1.5 EQUIPMENT TESTING 8

1.6 ROUTINE TESTING SCHEDULE 9

1.7 REPAIRS 10

1.1 POLICY

Dependable, well-maintained, precision equipment is essential to the accurate inspection of all commodities[1]. Poorly designed or manufactured equipment and equipment that is excessively worn or misadjusted may cause incorrect factor determinations.

a. Official Equipment. To ensure the accuracy and integrity of official inspections, sampling and inspection equipment used for official purposes must be:

(1) A model and type[2] approved for use by FGIS (see Approved Equipment List).

(2) Installed, aligned, standardized, and calibrated according to the manufacturer's recommendations, the guidelines established by this Handbook, and the appropriate Occupational Safety and Health Administration (OSHA) Standards.

(3) Maintained in good repair.

(4) Tested at scheduled intervals, in the prescribed manner, and found to be within tolerance.

(5) Protected from unauthorized adjustments.

Equipment which has serious operating deficiencies, does not operate within tolerance limitations, or has not been tested when required shall be considered to be not approved for official use and shall be removed from service until a subsequent test establishes its accuracy.

[1] The term "commodities," as used throughout the Handbook, means grain, rice, beans, lentils, and processed grain products.

[2] The mention of firm names or trade products does not imply that they are endorsed or recommended by the U.S. Department of Agriculture over other firms or similar products.

b. Elevator-Owned Equipment. Elevator-owned equipment may be used by agencies for official purposes provided that the above criteria are met. The Field Office manager should also consider the following guidelines before approving the use of elevator-owned equipment by agencies:

(1) Review each situation, especially the methods that will be used to protect the equipment from misuse or unauthorized adjustments.

(2) At a minimum, the agency should use their own dockage tester sieves, hand sieves, and test weight kettles. These should be kept secure.

(3) Seals should be used where applicable on moisture meters, the dockage tester air-baffle, etc.

(4) If precautions are not adequate, do not approve the arrangement.

c. Commercial Equipment. Commercial equipment includes devices that are approved or allowed by local or State weights and measures jurisdictions as "legal for trade." Much of FGIS official equipment meets stricter tolerances or design requirements than commercial equipment; however, commercial equipment may be considered for Official Commercial Inspection Services.

d. Government-Owned Equipment Loans.

(1) Government-owned equipment may be loaned to official agencies during legitimate emergencies for short time periods. These temporary loan provisions must be documented.

(2) No open-ended loans will be approved.

1.2 RESPONSIBILITIES

a. FGIS Headquarters:

(1) Field Management Division (FMD) shall:

(a) Foster the development and improvement of inspection equipment.

(b) Identify inspection equipment needs and recommend research projects to the Technology and Science Division (TSD).

(c) Announce the approval or rejection of new models and/or types of equipment.

(d) Maintain a List of Approved Equipment.

(e) Develop and publish policies and procedures pertaining to the maintenance, repair, and testing of equipment.

(f) Advise the FGIS Field Offices on the selection and purchase of equipment.

(g) Provide technical assistance to the Policies, Procedures, and Market Analysis Branch in the development of policies and procedures related to equipment use.

(h) Assist in the purchase of inspection equipment.

(i) Assist the Field Servicing Office (FSO), Animal and Plant Health Inspection Service (APHIS), on joint purchase orders, blanket purchase arrangements, and purchases of new types of equipment.

(j) Assist FSO in the negotiation of maintenance contracts with applicable manufacturers.

(2) Technology and Science Division shall:

(a) Foster the development and improvement of inspection equipment.

(b) Identify inspection equipment needs and research projects.

(c) Conduct and coordinate research projects to develop and evaluate inspection equipment.

(d) Assist FGIS Field Offices in the installation, maintenance, and repair of inspection equipment.

(e) Assist the Safety and Health Staff in the evaluation of inspection equipment, investigation of safety problems, and development of policies.

(f) Evaluate alternative testing methods.

(g) Develop policies, procedures, work forms, and schedules for the testing of equipment.

(h) Administer the equipment testing program.

(i) Train field personnel, in cooperation with the Audiovisual, Regulatory Management, and Training Staff.

(j) Maintain the National Standard and Headquarters Standard equipment in good repair and ensure compliance with OSHA Standards.

(k) Test the National Standard and Headquarters Standard equipment.

(l) Provide one set of samples for testing each piece of Field Office Standard equipment.

(m) Approve or reject Field Office Standard equipment.

(n) Maintain test records for Headquarters Standard and Field Office Standard equipment.

b. FGIS Field Offices. The FGIS Field Offices shall be responsible for all equipment used officially by the Field Office. Field Office equipment includes equipment that is provided for official use by a facility.

(1) Maintain Field Office equipment in good repair and ensure compliance with OSHA Standards.

(2) Designate an equipment specialist who will serve as the primary contact responsible for equipment testing.

(3) Identify and test Field Office Standard equipment (equipment aligned with a Headquarters Standard).

(4) Provide one (1) set of samples for testing each piece of Field Office and agency equipment.

(5) Test Field Office equipment.

(6) Supervise testing performed by sub-offices and agencies.

(7) Approve or reject FGIS Field Office, sub-office, and agency equipment.

(8) Maintain test records for FGIS Field Office, sub-office, and agency equipment.

c. Agencies (and FGIS Sub-Offices). The agencies shall be responsible for all equipment used officially by the agency. Agency equipment includes equipment that is provided for official use by a facility.

(1) Designate an equipment specialist who will serve as the primary contact responsible for equipment testing.

(2) Agencies and sub-offices shall not maintain Standard pieces of equipment, unless specially tested and approved by TSD.

(3) Maintain agency equipment in good repair and ensure compliance with OSHA Standards.

(4) Test agency equipment.

(5) Maintain test records for agency equipment.

1.3 RECORD KEEPING REQUIREMENTS

a. FGIS Headquarters. The office in charge of the inspection equipment testing program shall maintain completed test forms for at least 5 years from the date of the test for National Standard and Headquarters Standard equipment and Field Office Standard equipment.

b. FGIS Field Offices. FGIS Field Offices shall maintain completed test forms for at least 5 years from the date of the test for Field Office Standard equipment, Field Office equipment (other than Field Office Standard), and agency equipment.

c. Agencies. Agencies shall maintain completed test forms for at least 5 years from the date of the test for all of their equipment.

d. The following equipment test results must be entered into the Equipment Check Testing (ECT) online application:

1. Barley Pearlers
2. Dockage Machines
3. Falling Number Apparatus
4. Hand Sieves
5. Hopper Scales
6. Laboratory Scales
7. Mechanical Diverter Samplers
8. Moisture Meters
9. Mycotoxin Test Kits
10. Near Infrared Transmittance (NIRT) equipment
11. Rice Millers and Shellers
12. Railroad Track Scales
13. Test Weight Kettles
14. Vehicle and Commodity Scales

1.4 EQUIPMENT IDENTIFICATION

Serial Number. All equipment which is listed on the testing schedule shall be identified by a serial number. Equipment which does not have a manufacturer's serial number shall be assigned a number by the owner to provide a unique means of identification. That number shall be stamped or stenciled on the piece of equipment in a conspicuous location. In some cases (such as test weight) the same identification number is needed for each separate major part of the apparatus.

1.5 EQUIPMENT TESTING

Unless there is a need to know, Standard results or target values should be withheld from the test unit operator until after test completion (blind testing). All equipment should be tested 'as used' whenever possible. For example, dockage testers used for inspecting wheat should be set up for testing with the same sieves that are used for daily inspection work. Test weight per bushel apparatuses should be tested with the same kettle that is used for daily work.

a. Initial Tests. New equipment shall be tested prior to being put into service.

b. Scheduled Testing.

(1) Headquarters Standard and Field Office Standard Equipment. This equipment shall be tested on schedule in accordance with the testing schedule.

(2) Field Office and Agency Equipment (Other Than the Field Office Standard).

(a) Equipment, other than that which is in storage or used only at seasonal points, shall be tested periodically in accordance with the testing schedule, whenever practical. The Field Office manager may, at his or her discretion, establish an alternate written schedule provided that the alternate schedule requires the testing of all equipment at least once every 6 months.

(b) Equipment held in storage is not required to be tested until just prior to being put into service.

(c) "Back-up equipment" must be tested on schedule. Untested equipment may not be placed into service under any circumstances.

(d) At seasonal inspection offices (those that are open less than 6 months a year), equipment shall be tested once a year just prior to reactivation of the office.

c. Supplemental Tests. Equipment shall be tested as soon as practicable whenever:

(1) FGIS Headquarters, an FGIS Field Office, or an agency has comparative inspection results or other information that shows the equipment to be of questionable accuracy.

(2) It becomes apparent that the equipment has not been tested in accordance with the established testing schedule.

(3) Any repairs or alterations have been done (replacement of a minor part will not require the equipment to be retested).

(4) The equipment undergoes rough handling during movement or shipping.

1.6 ROUTINE TESTING SCHEDULE

Routine Testing Schedule		
Month	**Field Office Standard**	**Agency And Field Office Other Than Standards**
January	Test Weight Apparatuses	Rice Equipment
February	See Moisture HB	Test Weight Apparatuses & Lab Grain Test Scales
March	Barley Pearlers	See Moisture HB
April	Dockage Testers	Barley Pearlers
May		Dockage Testers & 9 Chess Sieve
June	Rice Equipment	Sampling Equipment
July	Test Weight Apparatuses	Rice Equipment
August	See Moisture HB	Test Weight Apparatuses & Lab Grain Test Scales
September	Barley Pearlers & Hand Sieves	See Moisture HB
October	Dockage Testers	Barley Pearlers & Hand Sieves
November		Dockage Testers
December	Rice Equipment	Sampling Equipment

a. Artificial Lighting Tests. This equipment shall be tested upon installation, after remodeling or other alterations, and routinely thereafter, at the discretion of the Field Office or agency manager.

b. Mechanical Sampling System Tests and Examinations. Each sampling system shall be tested prior to initial authorization for use and examined periodically thereafter, according to the Mechanical Sampling Systems Handbook.

c. Equipment not covered. Moisture meters, Near Infrared Analyzers, Falling Number apparatuses, Aflatoxin equipment, etc., are covered by separate Handbooks and Instructions.

d. Field Standard and Laboratory Counterbalance Weights. These weights shall be reverified by a National Institute of Standards and Technology (NIST)-certified State Weights and Measures Metrology Laboratory at least each 3 years to ensure that they are within NIST Class F tolerances.

1.7 REPAIRS

a. Safety. Before repairing any equipment, read the instructions in the appropriate handbook section. Unplug equipment before beginning adjustments or repairs. If equipment is hard-wired or has the potential to release stored mechanical or electrical energy, consult the local Collateral Duty Safety Officer and follow approved lockout/tagout procedures.

b. Equipment Specialists should receive the training, tools, and supplies needed so they are able to perform the adjustments, alterations, and repairs described in this handbook. More extensive repairs should be sent for repair per the manufacturer's or supplier's recommendations.

c. Repair of FGIS-owned moisture meters shall be performed by factory-approved repair facilities only. Equipment Specialists are not authorized to repair meters due to the difficulty in aligning repaired meters and other considerations, including program costs.

CHAPTER 2
GRAIN TEST SCALES

Contents

2.1 INTRODUCTION 2

2.2 INSPECTION 3

2.3 MAINTENANCE TOLERANCES 6

2.4 TESTING 8

2.1 INTRODUCTION

a. General. Scales[1] are an integral part of any well-equipped laboratory and are essential tools for all grain, rice, and commodity inspections. For official purposes, only use scales that are presently on FGIS' Approved Equipment List or

(1) Class II or III scales that have been evaluated by FGIS or a National Type Evaluation Program (NTEP) authorized laboratory and approved by NTEP as meeting commercial and FGIS criteria;

(2) Maintained in good operating condition; and

(3) Examined and tested at the prescribed intervals, in the proper manner, and found to be within tolerance.

b. Categories. A scale is either marked or unmarked, not both. Test each scale according to the procedures and tolerances for the category.

(1) Marked. New scales are approved based on NTEP and FGIS criteria by Class; for example, Class II or (II)

.

(2) Unmarked. Prior to 1986 grain test scales were categorized by type of use; i.e., precision, moisture, and general. FGIS approved scales based on division size, accuracy, and capacity. These scales remain approved.

[1]The term "scale," as used throughout this chapter, means either a scale or balance-type weighing device, used for weighing portions used to determine factor percentages (such as dockage), test weight per bushel, moisture portions, and other associated factors. Scales used for chemical determinations shall comply with requirements established by the Technology and Science Division (TSD).

2.2 INSPECTION

Before testing, inspect the scale for the following elements:

a. Zero Load Balance as Found. A scale shall be maintained so that with no load (except a tared scoop or pan) on the receiving element, the scale will maintain a zero balance condition.

b. Support. Check the table or desk on which the scale is used. If it is not stable, or causes vibration, fix the table or move the scale.

c. Level Condition. A scale equipped with a level-condition indicator shall be maintained in level. Examine and adjust the scale so that it is level front-to-back and side-to-side and indicates a zero balance.

d. Maintenance, Use, and Environmental Factors.

(1) Scales must be maintained in good operating condition. Examine and adjust scales prior to initial use and periodically thereafter, as needed. Keep scales clean and repair or replace loose, broken, and missing parts.

(2) Counterbalance weights must be Class F weights that have a current Report of Test. Weights must be retested by FGIS or a State metrology laboratory every 3 years.

(3) Ensure that the scale is in an area that is draft-free (one that is not close to an open window, fan, etc.) and is well lighted.

(4) Avoid temperature extremes and sources of electromagnetic interference.

(5) Inspect power cords for wear.

e. Sealing. Seal electronic scales after testing and disabling calibrate functions. Seals should prohibit access to jumpers or adjustable components. Mechanical grain test scales do not normally require sealing, since misadjustment is more readily apparent.

(1) Utilize either lead/wire seals or adhesive security seals (tamper-evident labels), such as FGIS-931, Approved Label.

(2) Sealing provides assurance that untrained employees have not had access to jumpers or adjustable components.

(3) Unauthorized breaking of seals invalidates the most recent test and “Approved” status of a scale. It will need retesting and a new seal.

Figure 1. Inspection Procedures

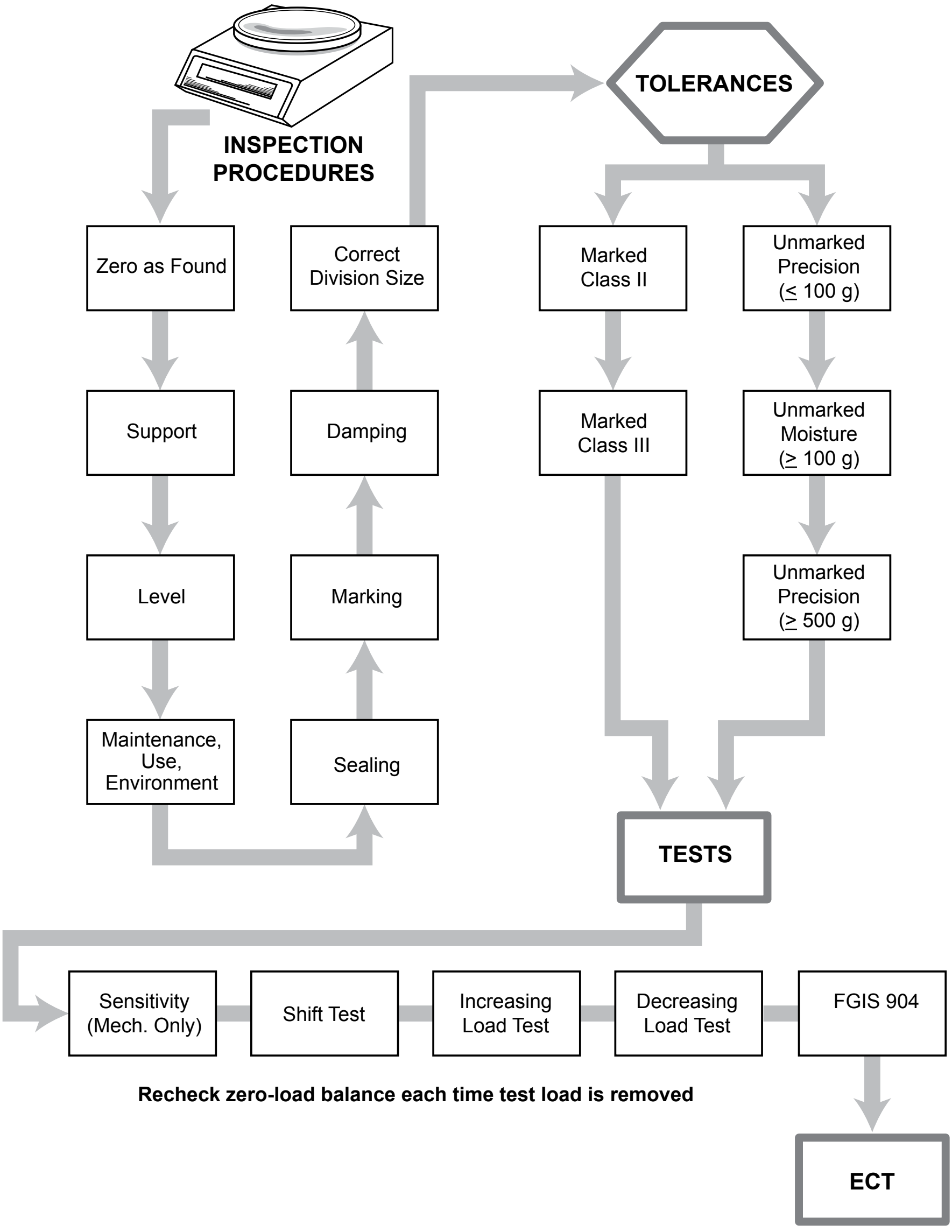

f. Marking. Scales should be marked with the manufacturer's name, model, serial number, class (if it is a marked scale), nominal capacity, value of a scale division (d), and value of the verification division (e) if different from d.

(1) When a scale is upgraded by a manufacturer, the manufacturer must revise the model number marking to correctly indicate the model change.

(2) Older, pre-1968 scales do not need to meet these marking requirements, but should have a serial number.

g. Damping. When applicable, check the dashpot for leakage and ensure that it is filled to the proper level.

h. Use. A scale shall be appropriate for the service in which it is used, including but not limited to, capacity, value of the scale division, computing capability, etc. Electronic scales may be set up with multiple configurations, some of which may not be appropriate for official use. FGIS has established that the accuracy classes and scale divisions for electronic scales shall not exceed those given in the following table:

Table 1, Required Division Sizes

Work Portion	Division Requirement	Accuracy Class
Precision	II	$e \leq 0.01$ g $d \leq 0.01$ g
Moisture	II, III	$e \leq 0.1$ g $d \leq 0.1$ g
General	II, III	$e \leq 0.5$ g $d \leq 0.5$ g

(1) The value "d" is the smallest division shown on the scale display.

(2) The value "e" is the verification division. It represents the true accuracy of a scale when the scale display has extra units added in order to extend the apparent resolution.

(3) If you need assistance in determining if a scale is being used appropriately or that it is configured with the correct division size, consult the Approved Equipment List.

2.3 MAINTENANCE TOLERANCES

After the pretest inspection, determine the class or type of scale you are testing. If it is a marked scale, it is Class II or Class III, and shall be tested utilizing one of the following tables:

a. Tolerances for Scales Marked with an Accuracy Class.

Table 2, Marked Scale Tolerances

Class II		Class III	
No. of Divisions	**Tolerance in scale divisions**	**No. of Divisions**	**Tolerance in scale divisions**
0-5,000	1	0-500	1
5,001-20,000	2	501-2,000	2
20,001 +	3	2,001-4,000	3
		4,001 +	5

(1) Sensitivity. Mechanical scales only, 1 d.

(2) Shift Error. Tolerance for the test load applied (above).

(3) Increasing Load. Tolerance for the test load applied (above).

(4) Decreasing Load Test. Tolerance for the test load applied (above).

The following table illustrates the same tolerance structure for marked scales in an alternate format that allows for easy determination of tolerances at each test load:

Table 3, Marked Scale Tolerances, Alternate Table

	NIST Accuracy Class II							NIST Accuracy Class III			
Test Load (g)	Division Size (grams)										
	0.01	0.02	0.05	0.1	0.2	0.5	1	0.1	0.2	0.5	1
1	1. Determine if the scale is Class II or Class III.										
2											
3	2. Read down from the division size and across from the test load to intersect at the correct tolerance to apply for each load.										
4											
5											
6											
7											
8				1d					1d		
9											
10											
20											
50											
100											
150											
200											
250											
300			2d							2d	
400									3d		
500		3d									
600								5d			
700											
1000											
1500											

b. <u>Tolerances for Scales not Marked with an Accuracy Class</u>.

If the scale being tested is an older, unmarked scale, it shall be tested for each type of use that it receives utilizing the following table:

Table 4, Unmarked Scale Tolerances

Type	*Use*	*Maximum d*	*Tolerance*	*Sensitivity (Mechanical Only)*	*Shift Test Tolerance*
Precision	*Samples ≤ 120 g*	0.01 g	0.02 g	0.01 g	0.02 g
Moisture	*Moisture portions from 150 g to 300 g*	0.1	0.2	0.1	0.2
General	*Samples > 120 g other than moisture portions*	1	1	1	1

2.4 TESTING

Test each scale when new (initial test), according to the testing schedule (periodic tests) and whenever the accuracy of the scale is in question, including after all repairs (supplemental tests). All testing must be performed with Class F weights that have a current Report of Test. Weights must be retested by FGIS or an approved State metrology laboratory each 3 years. Class P weights may be used by trained inspectors if they are handled with forceps and reserved for testing purposes only.

a. Zero Load Balance Change. All scales.

(1) Clean, level, and zero the scale with no load before testing begins.

(2) Monitor the no-load indication after application of each test weight, during all subsequent testing.

(3) The scale should return to zero each time the load is removed. Tolerance is ±1 d.

b. Sensitivity Test. All mechanical scales. Sensitivity denotes the degree of responsiveness to a change in load. The zero-load sensitivity test determines the minimum amount of gently applied load which is required to produce a visual change in the weight indication from zero balance. The sensitivity test should be repeated at the scale's maximum test load.

(1) Procedure for Testing Scales with Weight Loaders[2] .

(a) Move the weight loader one (1) scale division.

(b) Gently release the balance arrest.

(c) If the indicator responds by moving at least one (I) scale division on the indicator scale, the scale is acceptable. If it does not move at least one (I) scale division, the scale is not acceptable.

(d) Arrest the balance and return the weight loader to "0."

(2) Procedures for Testing Scales without Weight Loaders.

(a) Gently place a load on the scale equal to one (I) scale division.

(b) If the indicator responds by moving at least one (I) scale division, the scale is acceptable. If it does not, the scale is not acceptable.

(c) Note: Moisture balances without weight loaders, such as Shadograph scales, must clearly show adequate indicator movement of approximately 1 mm when 0.1 g (100 mg) is applied. The optical indicator must be properly focused and a Class F weight must be used for the test.

[2] An internal scale mechanism that provides for the addition of counterbalance weights by means of a dial.

c. Shift Test (all scales). This test discloses the weighing performance of a scale under off-center loading conditions.

(1) Use a test weight equal to approximately ½ the maximum test load applied during the increasing load test, e.g. Scale capacity is 2200g and was checktested for a capacity of 2200g, half the capacity used would be 1100g. Apply at a point midway between the center and the edge of each quadrant and observe the weight indication.

NOTE: When testing even arm balances, shift test one pan, while keeping counterweights centered on the other.

(2) If you note a deviation is noted in excess of the allowable error for any quadrant, do not approve the scale. See Section 3, Maintenance Tolerances, and apply the tolerance for the type of scale and weight used.

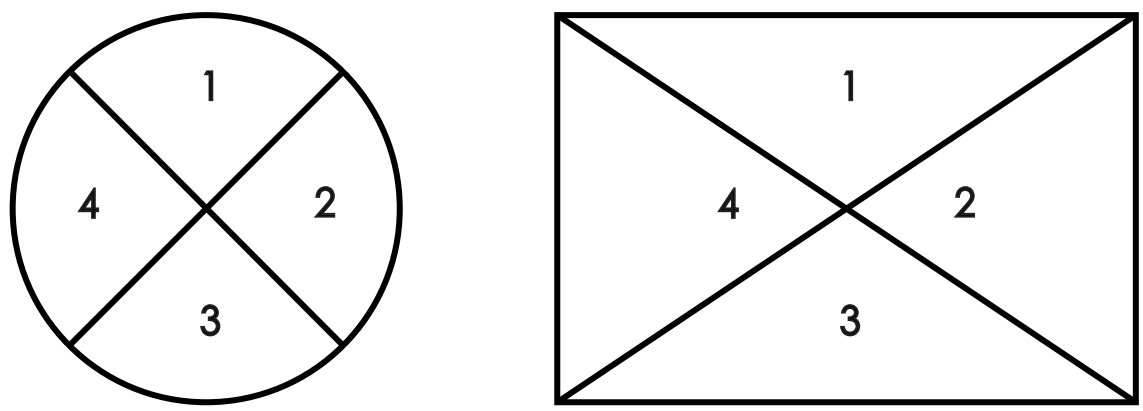

Figure 2. Quadrants, Load Receiving Element

d. Increasing-Load Test. This test determines the accuracy of a scale by comparing the value of applied weights to the weight indicated by the scale. A marked scale, (e.g., Class II, is tested only as a Class II scale). It is not tested as a precision or moisture scale, even though it may be used that way. However, an unmarked scale is tested according to its use. f an unmarked scale is used for moisture and general weighing, it should be tested for both uses that the scale receives, as described on page 2-10.

(1) Procedures for Testing NIST Class II and III Scales.

(a) Test scales in these classes to capacity or 1,500 g, whichever is less. Scale owners may opt to test above 1,500 g to capacity, if weights are available.

(b) Place a test load equal to 1 g on the scale and note the weight indication. Continue testing at the following levels as appropriate: 2 g, 3 g, 4 g, 5 g, 6 g, 7 g, 8 g, 9 g, 10 g, 20 g, 50 g, 100 g, 120 g, 150 g, 200 g, 250 g, 300 g, 400 g, 500 g, 600 g, 700 g, 1,000 g, and 1,500 g.

(c) If a deviation is noted in excess of the established tolerance, the scale is not approved.

(2) Procedures for Testing Precision Scales.

(a) Test these scales to capacity or 120 g, whichever is less. Scale owners may opt to test above 120 g to capacity, if weights are available.

(b) Place the l g test load on the scale and note the weight indication. Continue at the 2 g, 3 g, 4 g, 5 g, 6 g, 7 g, 8 g, 9 g, 10 g, 20 g, 50 g, 100 g, and 120 g test load levels.

(c) If a deviation is noted in excess of ± 0.02 gram, the scale is not approved.

(3) Procedures for Testing Moisture Scales.

(a) Test these scales to capacity or 400 g, whichever is less. Scale owners may opt to test above 400 g to capacity, if weights are available.

(b) Place the 100 g test load on the scale and note the weight indication. Continue testing at 150 g, 200 g, 250 g, 300 g, and 400 g.

(c) If the deviation is noted in excess of ± 0.2 gram, the scale is not approved.

(4) Procedures for Testing General Scales.

(a) Test these scales to capacity or 1,500 g, whichever is less. Scale owners may opt to test above 1,500 g to capacity, if weights are available.

(b) Place the 120 g test load on the scale and note the weight indication. Continue testing at the 150 g, 200 g, 250 g, 300 g, 500 g, 600 g, 700 g, 1,000 g, and 1,500 g test load levels.

(c) If a deviation is noted in excess of ± l gram, the scale is not approved.

e. Decreasing Load Test. All electronic scales. Test unmarked electronic scales immediately following the maximum applied test load of the increasing load test, at approximately ½ the maximum test load applied during the increasing load test. For Class II or Class III scales test at 400 g, 200 g, and 50 g.

f. Discrimination Test. Field locations are not required to perform the discrimination test on electronic grain test (laboratory) scales.

g. Test Record.

Checktesting paper forms are no longer required to be completed. Results can be directly entered in Equipment Check Testing (ECT) online application. The process for entering results in ECT for equipment that uses known value weights like scales and Test Weight kettle (water volume) allows all users to create and complete a checktest record and view if the results are within tolerance.

CHAPTER 3
LABORATORY ENVIRONMENT

Contents

3.1 LIGHTING 2

3.2 ENVIRONMENT 5

3.3 EQUIPMENT SAFETY 5

3.4 LABORATORY SAFETY 7

3.1 LIGHTING

a. General. The true color of a material or substance is best determined under natural daylight conditions, such as north-sky light on a semi-overcast day, or under artificial light in a room with muted tones. Since it is impossible to maintain natural lighting in a laboratory throughout any given day, artificial illumination that simulates north-sky daylight is essential. For official purposes, only use artificial lights that are:

(1) A type and model approved by FGIS. The List of Approved Equipment is available on the GIPSA website.

(2) Maintained in good operating condition.

(3) Tested in accordance with section 1.e

b. Specifications.

(1) Illumination (flux density). 150 - 200 foot candles (180 optimum).

(2) Diffusers. Non-color selective glass or plastic. Polarized diffusers are acceptable.

(3) Reflectors. Heat-resistant, nonyellowing, white enamel or highly polished metal.

(4) Emitters. Fluorescent emitters of a type and model approved by FGIS. The List of Approved Equipment is available on the GIPSA website.

Table 1. Fluorescent Emitter Specifications

Lamp Radiation	Specifications
2000 to 2499 Lumens	Color Rendering Index ≥ 92 Color Temperature 7500 °K Rated Average Life ≥ 15,000 Hours
Or	
≥ 2500 Lumens	Color Rendering Index ≥ 87 Color Temperature 7500 °K Rated Average Life ≥12,000 Hours

c. Installation.

(1) Install light sources in full compliance with the national and local electrical codes.

(2) Design installations to provide for the dissipation of emitter and ballast heat through the source enclosure to prevent reflector discoloration and ballast damage.

(3) Install light sources[1] to evenly distribute light and place end-to-end in rows whenever possible. For example, if the light fixtures are installed in rows end-to-end, then there should be 5 feet between rows (center-to-center) for ceilings lower than 8 ½ feet high, and 4 feet between rows for ceilings higher than 8 ½ feet.

(4) If window openings allow bright or glaring light to strike the work surface, cover the window openings with shades, venetian blinds, or plastic film of a neutral shade.

d. Maintenance.

(1) Clean light sources whenever necessary. Remove and wash fluorescent tubes and diffuser with detergent and water.

(2) Exercise care in handling fluorescent tubes; if broken, avoid breathing dust emitted from the tubes.

(3) To attain the expected life of fluorescent tubes, turn on the light source in the morning when the analysis work commences, and leave on until analysis work is completed.

(4) Relamp light sources as needed. Labs with ample levels of illumination may replace tubes as they burn out or after 80 percent of the expected life of the fluorescent tubes. At labs where levels of illumination are difficult to maintain, it is recommended that the lamps be replaced approximately every 2 years for a 10-hour use cycle, 5 days per week. A 1 ½-year relamp is recommended for a 24-hour use cycle, 7 days per week.

[1] A metal enclosure fitted with the necessary wiring, ballasts, sockets, fluorescent tubes, incandescent bulbs, reflectors, and diffusers to furnish illumination of suitable color quality and intensity for inspection purposes.

e. Testing.

(1) General. Check illumination at the time of initial installation, when a laboratory is remodeled, and at the discretion of the agency or Field Office manager. When possible, new tubes should be allowed to “burn-in” (stabilize) for approximately 100 hours before testing.

(2) Pre-Test Examination. Before testing the illumination, check the color fidelity of the diffuser.

(a) Remove the diffuser and observe the color of the undiffused light.

(b) Replace the diffuser and observe the color.

(c) If the color is different when the diffuser is in place, the diffuser should be replaced.

(3) Testing Procedures.

(a) Place an FGIS-approved light meter face up on an analysis surface. If necessary, turn the meter on and set it to the proper range.

(b) Stand away from the meter so that you do not block the light, but close enough to read the meter dial. Allow the meter to stabilize. It should be at room temperature.

(c) Read the dial. If the meter reading is between 150 and 200 foot candles (optimum 180 foot candles), the light source is acceptable.

(d) If the reading is outside the acceptance range, the illumination must be corrected by varying the distance of the source to the surface, changing the spacing of the sources, altering the number of emitters, or relamping.

(e) Repeat the test for all analysis surfaces.

(f) Upon completion of the test, record the results of the test on letterhead paper.

(g) In the case of out-of-tolerance lights, document on the record all pertinent facts and actions (including adjustments, retest, and follow-up action).

(h) After all test results are recorded, file the original record. Agencies shall also submit one copy of the record to the appropriate FGIS Field Office. (FGIS Field Offices do not need to submit copies of this particular record to FGIS Headquarters.)

(4) Light Meters.

(a) Only use light meters that are approved by FGIS.

(b) After any repairs, ensure that the meter is either factory adjusted or used with a calibration table. Calibration tables give the actual corrections to apply to each light meter at several reference readings.They are available from the FGIS Technology and Science Division (TSD).

3.2 ENVIRONMENT

a. The quality of an artificial light source may be affected by the color environment surrounding the source. To preserve the proper color environment:

(1) Exclude bright outside illumination from the laboratory.

(2) Paint the analysis rooms with nonreflecting paint (light gray or green preferred). Note: A flat white paint or an off-white acoustical tile may be used on ceilings, providing the white color does not extend below the level of the artificial lighting.

(3) Install light-colored, unpolished floors.

(4) Encourage the use of clean non-color selective glass or plastic eyewear.

(5) Cover a 16 inch x 24 inch (minimum) analysis surface with material approved by FGIS.

3.3 EQUIPMENT SAFETY

a. General Tips.

(1) Keep equipment clean and properly maintained.

(2) Keep all machine guards properly attached.

(3) Keep electrically-powered equipment clear of waterlines and drains. Extension cords, if necessary, shall have the proper load capacity to operate the equipment without danger of overheating.

(4) Do not use extension cords across the floor at doorways or as a substitute for fixed wiring.

(5) Do not make repairs or adjustments to equipment while the equipment is operating. Electrical repairs shall only be made when the device is disconnected from the power source.

(6) Fit inspection lights that are mounted above analysis tables with bumpers on all exposed edges where employees might strike their heads.

b. Electrical Safety Inspection-Grounding.

(1) The accepted electrical standards are in the Code of Federal Regulations, Subpart S (1910.301 to .309), effective April 16, 1981. Much confusion exists because the Code uses the word “grounding” to mean several different things. It is important to know the difference between “equipment grounding” and “system grounding”. The distinction is that equipment grounding connects all of the noncurrent-carrying metal surfaces together and to ground; whereas system grounding actually connects one of the current-carrying conductors (wires) to ground.

(a) Equipment grounding bonds all metal equipment surfaces together so there can be no voltage between them; and it provides a ground-fault current path from a fault location back to the electrical source, so that the fault current will rise to a level high enough to operate the over current protective device.

(b) System grounding provides the final connection from equipment-grounding conductors to the grounded circuit conductor thus completing the ground-fault loop; and it solidly ties one circuit conductor to “ground,” so that voltages from any source cannot cause harmfully high voltage to ground.

It should be noted that equipment grounding-bonding all equipment surfaces together to ground with a grounded, three-wire plug-is required whether or not the system is to be grounded.

(2) All equipment shall be inspected for proper grounding at least once a year.

(a) Equipment Grounding. All equipment and appliances that are not double insulated must be equipped with a grounded, blind front 3-wire plug.

1 Unplug the equipment and check with a simple battery--powered continuity tester such as an Allied, model 70305 (catalog No. 979-7000).

2 There should be continuity from the ground pin of the plug to the body or case of the equipment. This indicates that all noncurrent carrying metal surfaces are connected to ground.

(b) System Grounding.

1 Unplug all equipment and appliances.

2 Test each receptacle for correct wiring by using a 3-wire circuit monitor such as Fisher Scientific #09-525-Ground Monitor or Lab Safety Supply #YB-1509.

(c) Record. Record the results in a memorandum to your file.

3.4 LABORATORY SAFETY

a. Fire Protection.

(1) All personnel shall be familiar with building evacuation plans and follow recommendations of building management on evacuation procedures.

(2) Building elevators shall not be used for emergency evacuations unless specifically designed for this purpose.

b. Other Hazards.

(1) New methods and equipment are being developed to speed and improve grain inspection. Use of these methods and equipment may create special hazards.

(a) Thoroughly study all operating instructions and test procedures.

(b) Use protective equipment.

(2) When using high-intensity black lights, wear glass-lens safety glasses or ultraviolet light filtering goggles.

(a) Do not look into a black light beam or shine it at another individual.

(b) Do not use a black light on a highly reflective surface.

(3) Chemicals used in some inspection processes can be hazardous; read labels and use according to instructions. Read the material safety data sheet.

(a) Use proper chemicals and label all chemical containers.

(b) Use proper disposal procedures for all chemicals and their waste products.

(c) Store chemicals properly to prevent accidental container breakage; heed storage temperature requirements and chemical compatibility warnings.

(d) Store syringes and needles in separate locked containers. After they are used they shall be placed in puncture-resistant containers for disposal. Do not bend or break needles by hand.

(e) When using chemicals, ensure that the area is properly ventilated.

(f) When it is necessary to use a fume hood, make sure the hood is operating properly and the face-velocity of the air being moved by the fume hood is a minimum of 100 - 150 cubic feet per minute. (An inexpensive vaneometer, such as the Dwyer No. 480, can easily and quickly determine the air velocity. Follow the manufacturer's instructions for using the vaneometer.)

c. Safety Consciousness. Safety in a controlled environment such as the inspection laboratory is the responsibility of all personnel.

(1) Follow proper procedures, be alert for possible hazards, and correct or eliminate potential hazards immediately.

(2) Respect your coworkers' right to a safe environment by working safely yourself.

(3) Maintain a basic First Aid Kit.

(4) Train employees in First Aid and Cardiopulmonary Resuscitation.

(5) Pick up spills immediately. Keep surplus grain buildup to a minimum.

d. Safety Reference for Laboratories.

(1) OSHA Safety and Health Standards, 29 CFR 1910 is available from Superintendent of Documents, U.S. Government Printing Office, Washington, D.C. 20402, or your local OSHA office.

(2) Safety manuals and pamphlets are available from most major laboratory supply companies.

(3) Collateral Duty Safety and Health officers maintain material safety data sheets for chemicals encountered on the job.

CHAPTER 4
DOCKAGE TESTERS

Contents

4.1 INTRODUCTION 2

4.2 TOLERANCES 3

4.3 MAINTENANCE AND ALIGNMENT 3

4.4 ADJUSTMENTS 6

4.5 TESTING 10

4.6 REPAIRS AND MODIFICATIONS 13

4.7 SUNFLOWER SEED CALIBRATION 15

4.1 INTRODUCTION

The dockage tester (figure l) is used to mechanically separate the various components of a grain or rice sample according to particle size and weight. For official purposes, use only dockage testers that are (l) a type and model approved by FGIS; (2) maintained in good operating condition; (3) properly adjusted; and (4) tested and examined at the prescribed intervals, in the proper manner, and found to be within tolerance. A list of approved equipment is available on the GIPSA website.

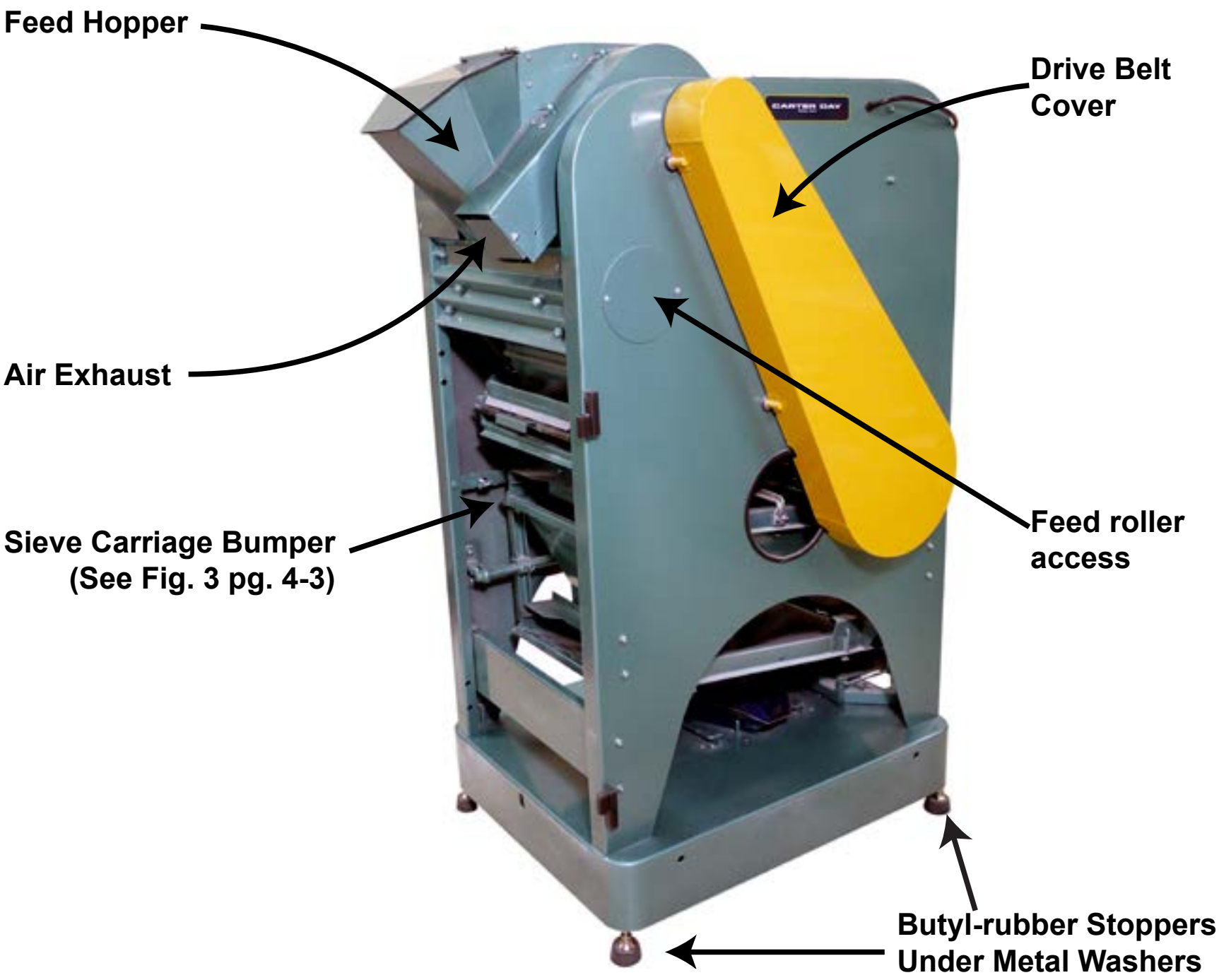

Figure 1. Carter Day Dockage Tester

4.2 TOLERANCES

a. Wheat Dockage Removal.

(1) Air Separation: ± 0.10 percent, mean deviation from Standard dockage tester using Hard Red Winter wheat.

(2) Riddle Separation: ± 0.10 percent, mean deviation from Standard dockage tester using Hard Red Winter wheat.

(3) Sieve Separation: ± 0.10 percent, mean deviation from Standard dockage tester using Hard Red Winter wheat.

(4) Total Separation: ± 0.15 percent, mean deviation from Standard dockage tester using Hard Red Winter wheat.

b. BCFM Removal.

± 0.20 percent, mean deviation from Standard dockage tester using corn.

4.3 MAINTENANCE AND ALIGNMENT

a. General. Maintain dockage testers in good operating condition. Check and align them prior to initial use and periodically thereafter.

b. Placement. Position the dockage tester so there is sufficient working space for changing sieves and riddles, cleaning and maintaining the tester, and handling the samples. In facilities with a weak floor, install the tester above or near a floor beam.

c. Leveling.

(1) Check the lengthwise levelness with the spirit level mounted on the side of the tester. Make adjustments by placing shims under the legs. If butyl-rubber stoppers are used, place steel washers as shims between the stoppers and legs. (See figure 1.)

(2) Check lateral levelness by observing the distribution of a light stream of wheat as it flows down the No. 2 sieve (If a No. 2 sieve is not available, use some other sieve and the most appropriate grain). If the grain flows down the middle of the sieve, the lateral levelness is satisfactory.

If the grain flows to one side of the sieve, place shims under the appropriate pair of legs to correct the grain flow. The most recently produced tester (XT-7) has stainless steel foot levelers installed.

d. Sieve Vibration.

(1) For uniform sieving results, sieve vibration must be kept to a minimum, particularly when the No. 2 (reclaiming) sieve is used in the bottom position. The recommended allowable deviation of the over-the-bottom separation is ± 0.10 percent mean deviation from Standard; however, this is a guideline for adjustment purposes--not a tolerance.

(a) Some sieves will vibrate more than others when used in the bottom position. When two No. 2 sieves are used in combination, place the sieve with the smoothest sieving action in the bottom carriage.

(b) If needed to minimize the vibration caused by the tester, install No. 10 butyl-rubber stoppers under the tester's legs.

(c) Assign all wheat sieves an identification number. In addition, identify the No. 2 sieve used in the middle sieve carriage as Middle or M and the sieve used in the bottom sieve carriage as Bottom or B.

(2) The top sieve carriage is designed so that the sieve will fit loosely in the retainer. The floating action, as well as the jarring effect, keeps the sieve clean. The beneficial sieve cleaning action is lost if the sieve is held tightly in the top sieve carriage; trimming the sieves will help to ensure this floating action. Using shears, trim both corners of the discharge end as indicated.

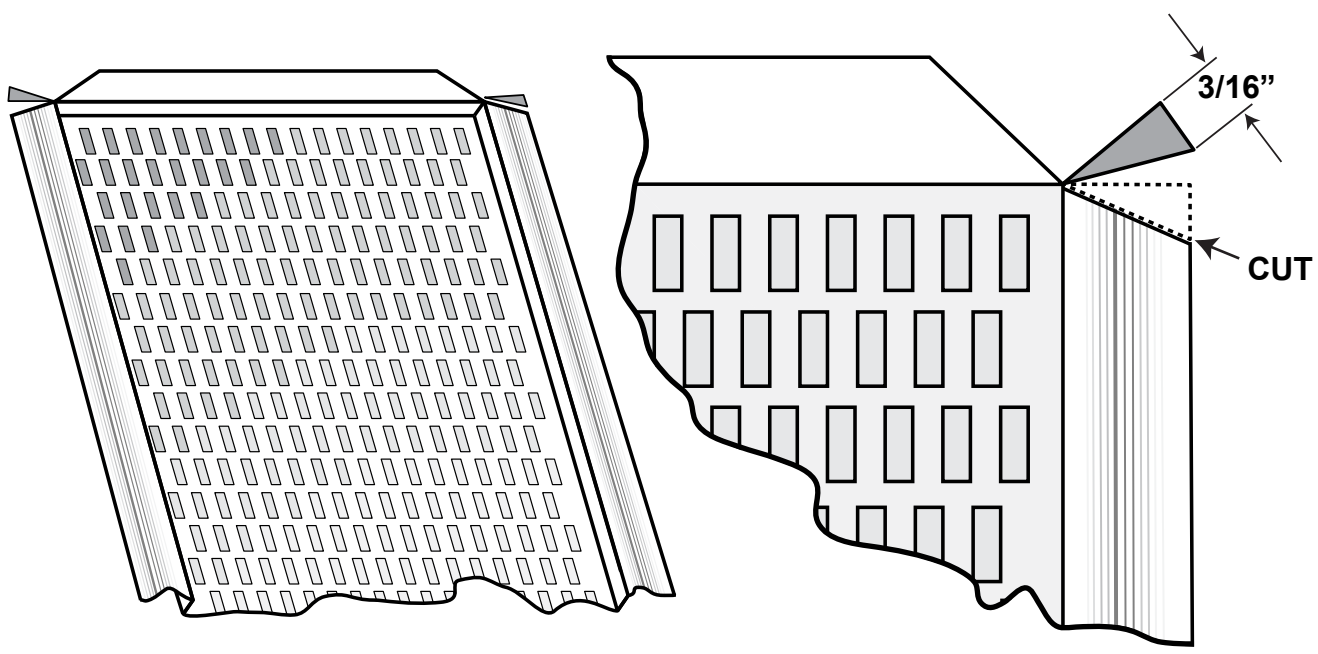

Figure 2. Top Sieve Top Sieve

(3) Sieves used in the upper sieve carriage may crack or split along the edge of the discharge end. Replace sieves when these cracks appear.

e. Sieve Carriage Bumper. For a dockage tester used for grain inspection work, ensure that the sieve carriage bumper (figure 3) is removed or adjusted so as to be inoperative. The sieve carriage bumper may be used for rice inspection work.

Figure 3. Sieve Carriage Bumper

f. Sieve Cleaning Attachment. Ensure that the sieve cleaning attachment is properly adjusted. If the attachment is causing sieve vibration problems, do not use the assembly.

g. Drive Chain Tightener Assembly. Check the tension of the sieve carriage drive chain. Adjust the chain idler on the drive chain tightener assembly so that just enough pressure is applied to make the chain operate smoothly with no appreciable slack.

CAUTION Unplug the tester prior to adjusting the chain idler.

h. Riddle Condition. Check riddles for material which has lodged in the ports. Remove material with grain forceps or other suitable tools, not by dropping the riddle on a hard surface. Replace or repair riddles having ports that are warped or separated.

i. Aspirator Screen. Examine the screen for punctures, tears, clogging, and separation from the frame. Replace damaged screens.

j. Aspirator Housing. Inspect the housing for leaks and seal as necessary.

k. Fan Wheel. Inspect and clean as needed.

l. Feed Gate. Check the feed gate for alignment with the hopper. If samples feed unevenly, realign the feed gate.

m. Feed Roller. Check the feed roller for scoring and wear, and replace if the condition of the roller is preventing the smooth and even feeding of material through the feed gate. (Instructions for replacing the feed rollers are given on page 4-14.)

n. Noise Reduction. Listen to the dockage tester in operation. If it is too loud, replace the bushings and rubber mounts, tighten the drive chain, and lubricate all moving parts.

o. Power Cord. Inspect for wear.

4.4 ADJUSTMENTS

a. General. After the maintenance and alignment checks on a new (or recently repaired) dockage tester have been performed and all appropriate adjustments have been made, the tester's camshaft speed, feed rate, and air control shall be adjusted.

b. Adjusting the Camshaft Speed.

(1) Adjust the speed of the camshaft to 147 revolutions per minute (rpm) ± l rpm. To determine whether the shaft speed is correct, turn the tester on and count the number of "kicks" per minute or observe a rpm indicator placed on the camshaft. To ensure accuracy, take three readings and average the results.

(2) If the camshaft is not revolving at 147 rpm ± l rpm, adjust the motor drive pulley (figure 4). This pulley consists of two sections mounted on a threaded shaft. Adjusting the outer section causes the drive belt to ride higher or lower on the pulley, changing the belt speed.

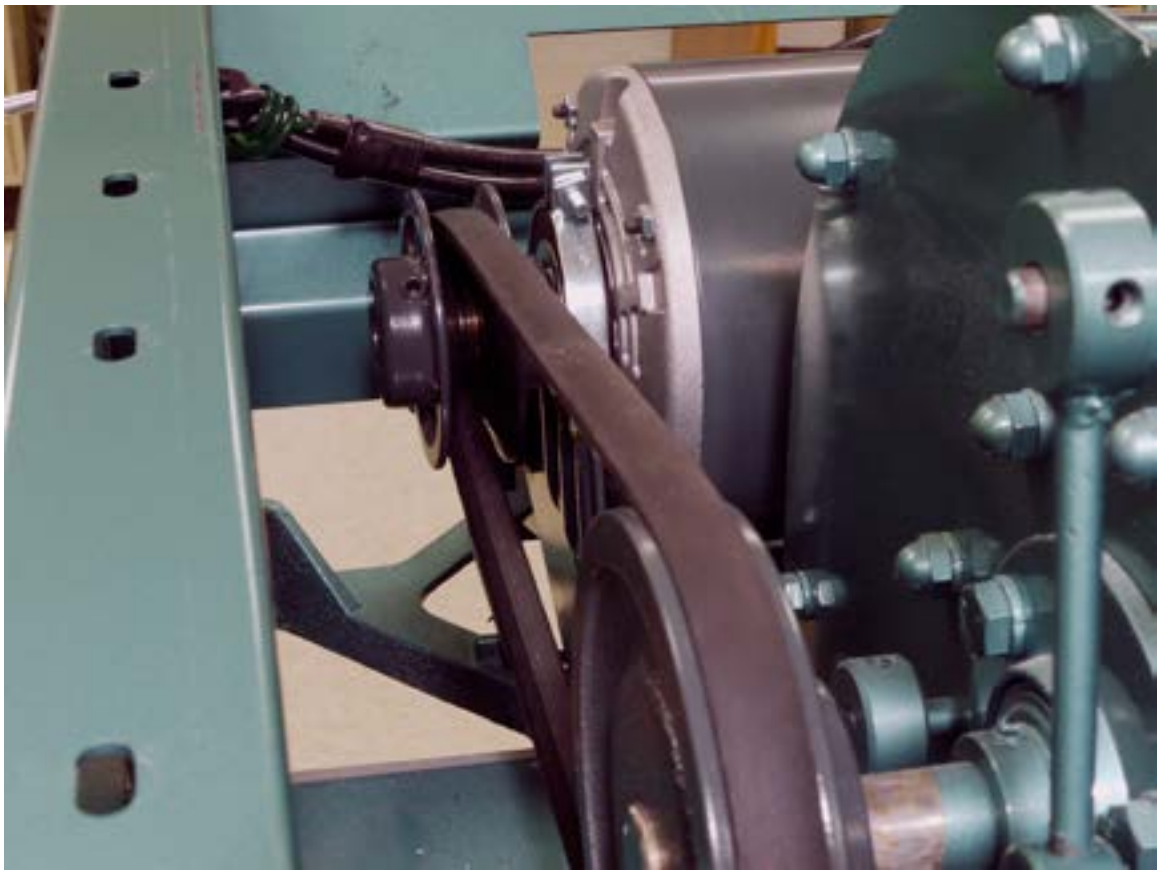

Figure 4. Camshaft Pulley Assembly

(3) To adjust the camshaft speed:

(a) Unplug the tester and loosen the setscrew located on the outer section of the pulley (figure 4).

(b) Rotate the outer section clockwise to increase speed or counterclockwise to decrease speed. A quarter turn adjustment will usually change the camshaft speed 3 to 4 rpm.

(c) Tighten the setscrew, recheck the camshaft speed, and readjust if necessary.

NOTE: When the drive belt is replaced, check and readjust the camshaft rpm at least weekly, as the new belt seats into place.

c. Adjusting the Feed Rate.

(1) Adjust the feed rate so that a sample of dockage-free wheat will clear the feed hopper in 30 to 33 seconds.

(2) To determine whether the feed rate is correct, prepare a test sample of Hard Red Winter wheat. (If Hard Red Winter wheat is not available, contact the nearest FGIS Field Office or FGIS Headquarters for assistance.) The wheat samples should consist of 1,000 g of dockage-free wheat, of approximately 60 lb/bu test weight.

(3) Loosen the feed control wing nut retainer, set the feed rate to No. 6, tighten the wing nut retainer, and turn the dockage tester on. Then, pour the sample into the hopper while simultaneously starting a stopwatch. Stop the watch when the sample clears the hopper and note the time.

(a) If the sample clears the hopper in less than 30 seconds, retard the feed-control knob (move slightly toward the “0” position).

(b) If the sample clears the hopper in more than 33 seconds, advance the feed-control knob.

(c) Recheck the feed rate and readjust, if necessary.

(d) When the correct feed setting has been determined, tighten the wing nut which puts tension on the shaft.

(e) Loosen the setscrew which fastens the knob to its shaft.

(f) Align the knob with the No. 6 setting and retighten the setscrew.

(g) Recheck the feed rate to ensure that the final adjustment is correct.

d. Air Control Operation.

(1) Air-Control Knob.

Determine that the air-control knob (figures 5 and 6) is tight on the shaft and does not have a tendency to slip when the knob is turned from one position to another. If the knob rocks on the shaft, the setscrew has probably worn a groove in the shaft. Before making any air adjustment, correct the knob slippage problem by either: (I) turning the shaft to a new position; (2) reversing the ends of the shaft; or (3) installing a new shaft.

(2) Air-Control Valve.

Determine whether the air-control valve (figures 5 and 6) is completely closed when the air-control knob is in the extreme clockwise position. Check the position of the air-control valve by exerting counterclockwise pressure on the air valve arm with the fingers. If the check shows the air-control valve is closed when the control knob is in the No. I position, the air-control valve is adjusted. However, if the check shows that the air-control valve is not completely closed, or if the air-control valve is closed before the indicator reaches the No. 1 position, the air-control valve must be adjusted.

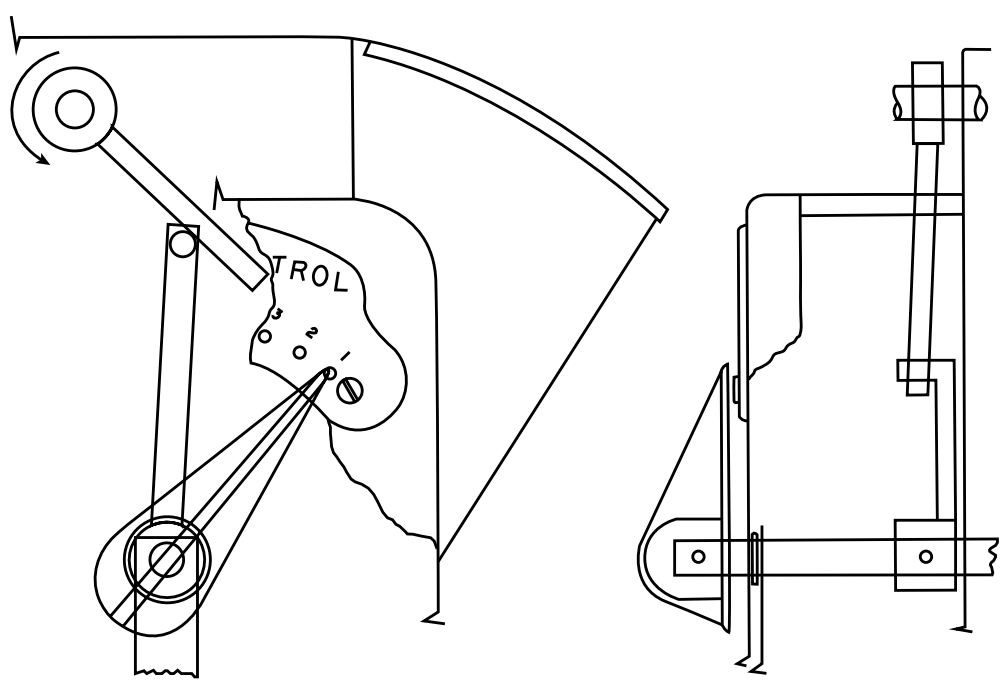

Figure 5. Air Contol Assembly (XT-1)

NOTE: When adjusting the air-control valve, keep in mind that a slight discrepancy in the adjustment of the air-control valve significantly affects the amount of material removed. Therefore, all settings must be precise.

(a) Adjusting the Air-Control of Model XT-I.

1) Loosen the setscrew in the air-control valve arm. (See figure 5.) Hold the arm in the No. I position, and advance the air-control knob. Re-tighten the setscrew in the air-control valve arm.

2) Loosen the setscrew on the air-control knob. Press the valve arm counterclockwise, using just enough pressure to completely close the air-control valve. Tighten the locking nut that puts tension on the control valve for holding it in this position. With the setscrew loosened, rotate the air-control knob until the indicator is in the No. I position, then re-tighten.

3) Set the air-control knob to position No. 4 and the feed control to position No. 6.

4) Using wheat samples with known amounts of air dockage (such samples may be obtained from the nearest FGIS Field Office), adjust the air-control knob until proper results are obtained. Loosen the setscrew in the air-control knob, rotate the air-control knob until the indicator is in the No. 4 position, then re-tighten.

(b) Adjusting the Air-Control for Models XT-2, XT-3, XT-5 and XT-7.

1) Loosen setscrew A. (See figure 6.) Grasp the air-control valve shaft with thin-nose pliers and turn the shaft counterclockwise as far as possible.

2) Hold the shaft in this position, turn the air-control knob to the No. I position, and tighten setscrew A. (When the air valve is closed completely at the No. I position, the maximum setting obtainable with the air-control knob will be considerably less than No. 7.) For standard models that have not been modified, set the air-control knob to position No. 4 and the feed control to position No. 6.

3) For models with the flax modification, set the original air-control knob to the maximum open position (approximately No. 7). This control will remain in the maximum open position when air is applied. Set the air-control knob on the new assembly to No. 4 and the feed control to position No. 6. Return the valve to closed position when aspiration is not to be applied; i.e., corn or sorghum.

4) Using wheat samples with known amounts of air dockage (such samples may be obtained from the nearest FGIS Field Office), adjust the air-exhaust valve until proper results are obtained.

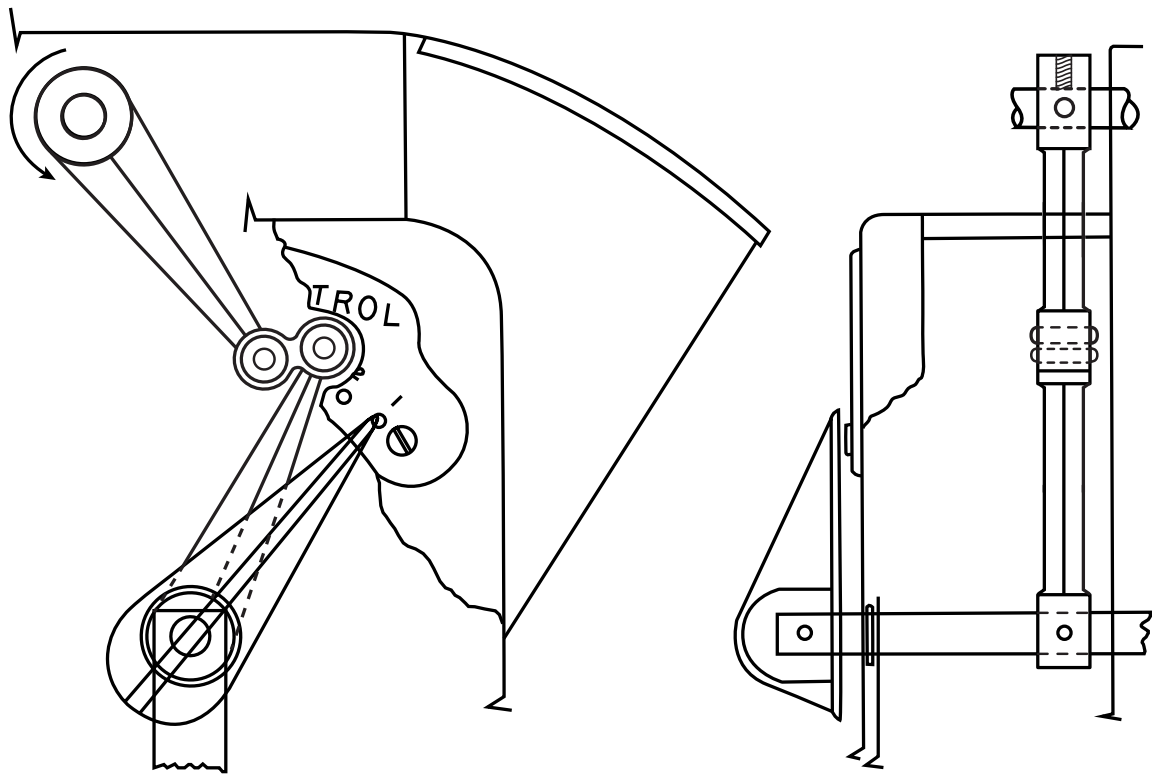

Figure 6. Air Contol Assembly (XT-2 and 3)

4.5 TESTING

a. General. Test each dockage tester according to the testing schedule (periodic tests) and whenever the accuracy of the tester is in question, including after all repairs (supplemental tests).

b. Test Preparations.

(1) Initial, Periodic, and Supplemental Tests.

(a) The testing office (FGIS Headquarters, in the case of Field Office Standard testers, or the Field Office, in the case of all other testers) shall prepare three test samples of Hard Red Winter wheat or corn.

NOTE: Corn only dockages testers may be initially tested with corn.

1 The wheat samples should consist of approximately 980 grams of dockage-free wheat and 20 grams of dockage.

2 The fine dockage used for test samples should consist of cracked wheat and fine seeds of the type generally found in Hard Red Winter wheat. Avoid using wheat containing mustard seed, pigeon grass seed, or wild buckwheat when preparing test samples.

3 The dockage should consist of: Riddle dockage-5 grams, air dockage-5 grams, and sieve dockage-10 grams.

(b) The testing office shall test the samples using the Headquarters Standard or Field Office Standard; next, place them in anti-static zip lock bags, numbered from one to three; and then, send them to the appropriate office for testing.

(c) Each test sample shall be tested in accordance with the test procedures.

(2) Carter- or Emerson-Type Testers Used for Corn.

(a) The testing office shall prepare three test samples of yellow corn. The corn samples shall contain approximately 3.0 percent broken corn and foreign material.

(b) The testing office shall test the samples using the Headquarters Standard or Field Office Standard; next, place them in anti-static zip lock bags, numbered from one to three; and then, send them to the appropriate office for testing.

(c) Each test sample shall be tested in accordance with the test procedures.

c. Test Procedures – Wheat Only.

(1) Thoroughly clean the dockage tester. Insert the appropriate sieves and riddles, and set the air and feed controls to the proper positions.

(2) Empty the first sample into a hand sieve bottom pan and mix it thoroughly. The light air dockage may tend to cling to the containers; make an extra effort to retain all components of the sample. (Do not weigh the samples. Calculations shall be based on 1,000 grams.)

(3) Turn the tester on and pour the sample into the hopper.

(4) While pouring the sample into the hopper, activate a stopwatch. After the sample has cleared the hopper, note the time that has elapsed and record it on FGIS-928, “Dockage Checktest.” After the sample has cleared the middle sieve, stop the stopwatch and record the total time that has elapsed on FGIS-928. While the dockage tester is still running, lightly tap the sieves so that all material is expelled.

(5) Turn the machine off.

(6) After the machine has stopped, clean the riddle and sieves, and place any material that was lodged in them into the appropriate separation pan.

(7) Pour the air, riddle, over-the-bottom sieve, and through-the-bottom sieve separations, as applicable, into individual pans.

(8) Weigh each separation to 0.01 gram and record the results on FGIS-928.

(9) Place each separation into individual envelopes identified by sample number and type of separation. Place the dockage-free sample in an anti-static zip lock bag with proper identification.

(10) Test the second and third samples in the same manner as the first. Record the results on FGIS-928. Place the separations in identified envelopes and the samples in plastic bags.

(11) Return the dockage separations and the dockage-free samples in the anti-static zip lock bags to FGIS Headquarters or the Field Office, as appropriate.

(12) Upon entering information into the Equipment Capability Testing (ECT) database, FGIS Headquarters or the Field Office, as appropriate, shall complete the form by recording their test results and then comparing the results of the two tests. If the average variations of the test results are within allowable deviation, the tester is acceptable.

(13) In the case of out-of-tolerance equipment, document all pertinent facts and actions (including adjustments, retests, and follow up actions) on FGIS-928.

(14) After evaluating the test results, the test unit operator shall retain the original copy of the completed FGIS-928.

d. Test Procedures - Corn Only.

(1) Carter dockage testers which are only used for determinations of BCFM may be tested using corn initially. Subsequent testing of Carter dockage testers and all testing of Emerson dockage testers may also be performed using corn.

(2) Thoroughly clean the dockage tester, insert the appropriate sieve, and set the air and feed control to the proper positions.

(3) For Carter dockage testers perform preliminary testing and standardization checks as done for wheat, except the corn sample shall be required to clear the sieve in 50- to-60 seconds. This may not be obtainable at the No. 10 setting. If not adjust the controls as necessary.

(4) Empty the first sample into a hand sieve bottom pan and mix it thoroughly. Do not weigh the sample; calculations shall be based on 1,000 grams.

(5) Turn the tester on and pour the sample into the hopper and activate stopwatch. After the sample has cleared the sieve, stop the stopwatch and record the total time that lapsed on FGIS-928. Then, turn off the tester.

(6) After the tester has stopped, clean the sieve and place any material that was lodged in the sieve into the appropriate separation pan.

(7) Weigh the separation to 0.01 gram and record the results on FGIS-928. Do not handpick the sample. Place the separation into an envelope identified by sample number Place the BC-FM free sample in a plastic bag with proper identification.

(8) Test the second and third samples in the same manner as the first. Record the results on FGIS-928.

(9) Test unit operator must maintain original FGIS-928 until entered into ECT.

(10) Upon completion enter results into ECT for verification of acceptability (form FGIS-928 no longer needed).

4.6 REPAIRS AND MODIFICATIONS

a. Feed Roll Replacement.

(1) Disconnect the power.

(2) Loosen the two setscrews and remove the sprocket and chain from the right-hand side of the feed roll shaft. Remove paint and setscrew scars from the shaft by sanding and scraping.

(3) Remove the flanged bearing from the feed roll (left side for model XT-1, right side for models XT-2 and XT-3). The flanged bearing is fastened at the side of the feed hopper with two machine screws. Removing the lower screw is difficult because the nut is located on the inside of the hopper. The screw should be removed with a large-blade, close-fitting screwdriver.

(4) Remove the feed roll by withdrawing it through the hand opening.

(5) Before placing the new feed roll into position, place a new 1/4-inch by 3/4-inch hex-head cap screw in the lower screw location with the head on the inside of the hopper. The screw can be inserted readily if the feed control is held in the wide-open position.

(6) Place the new feed roll in the proper position in the hopper.

(7) Return the bearing to its original position by slipping the lower projection over the previously inserted cap screw while holding the head from the underside. Replace the upper machine screw and tighten nuts.

(8) Replace sprocket and chain. Align sprocket and tighten setscrews.

(9) Check the camshaft speed and the feed gate alignment.

(10) Standardize the feed gate setting for the correct rate of feed.

b. Installation of Modified Air-Control Assembly on Models XT-2,XT-3, XT-5 and XT-7 (Flax-Modification).

(1) Remove the air-exhaust valve and the final section of the air-exhaust from the air-exhaust pipe.

(2) Remove the air-exhaust valve from the modified air-control assembly to allow room for installing bolts supplied with this assembly.

(3) Install the modified air-control assembly with the bolts supplied with the modified air-control assembly.

(4) Seal the outside joint of the new and original exhaust pipe sections by using a silicone sealant or other suitable adhesive that will not be tacky after curing.

(5) Replace the air-exhaust valve in the modified air-control assembly so that the air-control knob pointer is at position No. 1 when the valve is completely closed.

c. Laboratory Dust Removal Systems.

(1) A laboratory dust removal system that controls dust from the dockage machine should not be connected directly to the exhaust. There should be an open area between the tester's exhaust and the intake of the dust removal system. Most have a "stand off" connection that includes vents and cutouts to allow free flow of air. The open area should allow air to come from the vicinity of the discharge spout, rather than from the spout itself.

(2) The dust system has to be connected so that the dockage tester will operate and perform in exactly the same manner, with the same settings, whether the laboratory dust system is on or off.

(3) The setup shall be tested upon installation and documented on FGIS-928, "Dockage Checktest."

d. Rocker Arm Adjustment for High OBS. Sometimes a dockage tester may consistently yield high over-the-bottom (OBS) material and perhaps low through-the-bottom sieve (TBS) material. Low TBS may be increased by decreasing a high air separation, since Air and TBS have an inverse relationship. However, if the air is not in need of adjustment and the TBS is low (possibly coupled with high OBS) you should:

(1) Replace the #10 rubber stoppers on the machine base, or

(2) Decrease the length of the rocker arm stud (part 16912). This is located on the middle/bottom sieve box. Movement of the sieve box should be approximately 9/16 inch. The length of the rocker arm stud on most dockage testers is approximately 2- 9/16 inch.

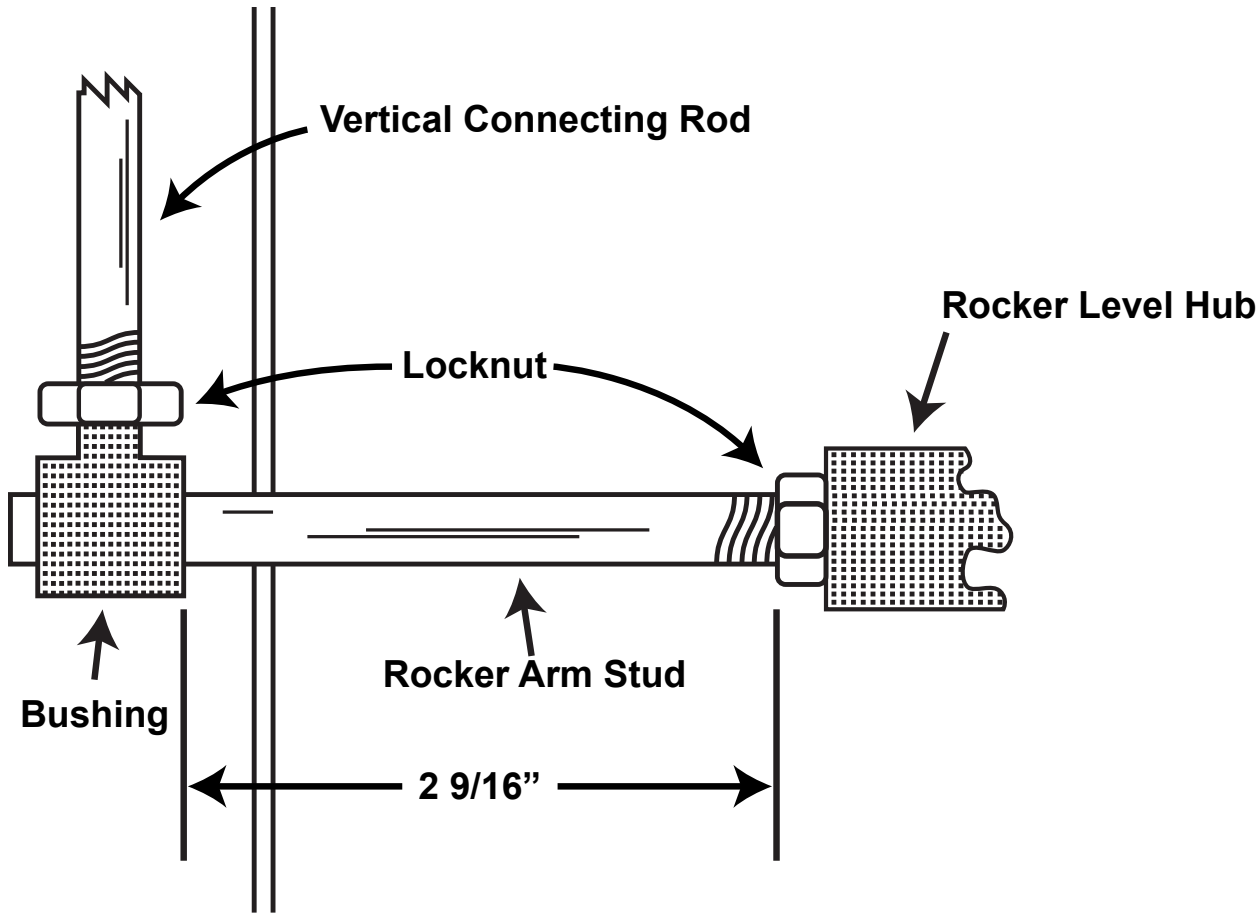

Figure 7. Rocker Arm

4.7 SUNFLOWER SEED CALIBRATION

a. General.

(1) Calibrate each dockage tester that will be used to inspect sunflower seed prior to testing sunflower seed and whenever the internal air-control adjustment is changed.

(2) Calibration goal: ± 0.50 percent dockage, mean deviation from Standard dockage tester using sunflower seed.

(3) Only dockage testers that are in tolerance for wheat may be calibrated for sunflower seed. After calibration, the dockage testers shall henceforth be tested only with wheat.

b. Calibration Preparations.

(1) FGIS Headquarters shall prepare calibration samples of sunflower seeds. The sunflower seed samples shall consist of 575 grams of dockage-free sunflower seed and 25 grams of dockage. The dockage should consist of: riddle dockage (-5 grams), air dockage (-10 grams), and through-the-bottom sieve dockage (-10 grams).

(2) Six samples shall be provided for calibrating each Field Office and agency tester.

(3) The samples shall first be tested by FGIS Headquarters using the Headquarters Standard; next placed in anti-static zip lock bags, numbered from one to six; and then, mailed to the Field Office or agency for testing.

(4) Each sample shall be tested in accordance with the following calibration procedures.

c. Calibration Procedures.

(1) Thoroughly clean the dockage tester. Insert the #3 sieve in the top carriage, #8 sieve in the bottom carriage, and the sunflower seed riddle in its holder. Set the air control at 6 and the feed control at 7 1/2.

(2) Empty the first sample into a hand sieve bottom pan and mix it thoroughly. The light air dockage may tend to cling to the containers; make an extra effort to retain all components of the sample. (Do not weigh the samples. Calculations shall be based on 600 grams.)

(3) Turn the tester on.

(4) While pouring the sample into the hopper, activate a stopwatch. After the sample has cleared the hopper, note the time that has elapsed and record it on FGIS-928, “Dockage Checktest.” After the sample has cleared the bottom sieve, stop the stopwatch and record the total time that has elapsed on FGIS-928. Allow the machine to run until the riddle separation has cleared the riddle.

(5) Turn the machine off.

(6) Clean the riddle and place any material that was lodged in it into its separation pan. Clean the sieves and place any material lodged in them into the clean sample.

(7) Put the air, riddle, over-the-bottom sieve, and through-the-bottom sieve separations into individual pans. Do not hand adjust.

(8) Weigh each separation and record the results on FGIS-928, shown to 0.01 gram.

(9) Place each separation into individual envelopes identified by sample number and type of separation. Place the dockage-free sample in an anti-static zip lock bag with proper identification.

(10) Compare the weight of the air separation to the known air separation weight for that sample and adjust the air to “0” deviation.

(11) Test the second and third samples in the same manner as the first. Record the results on FGIS-928. Place the separations in identified envelopes and the samples in plastic bags. After each test, correct the air setting as needed. If the dockage tester is not in line after the third test, call FGIS Headquarters.

(12) After the dockage tester is calibrated, mark the air setting.

(13) Test the fourth, fifth, and sixth samples in the same manner as the first three. Record the results on FGIS-928. Place the separations in identified envelopes and samples in anti-static zip lock bags.

(14) Hold the dockage separations and the dockage-free samples until notified.

(15) For the dockage machine, the office creating the samples creates thechecktest record and then includes the unique identifier “TRN” with each sample. The user opens the TRN and enters the results. Upon submitting the record the user can see if results are within acceptable tolerances. Also there are processes currently in use to retest the original sample and the current chapter never mentions or addressing how to handle results that fail to meet tolerances.

(16) Return samples to FGIS Headquarters with the dockage recombined in the anti-static zip lock bags received in.

CHAPTER 5
TEST WEIGHT PER BUSHEL APPARATUSES[1]

Contents

5.1 INTRODUCTION 2

5.2 TOLERANCES 2

5.3 MAINTENANCE 2

5.4 TESTING 3

[1] Includes approved test weight per bushel apparatuses that utilize a weighing beam, or approved filling apparatuses, kettles, and electronic or mechanical scales.

5.1 INTRODUCTION

Test weight per bushel apparatuses enable inspectors to determine the approximate weight of a bushel of a particular lot of grain or rice. For official purposes, only use test weight per bushel apparatuses that are (l) a type and model approved by FGIS; (2) properly adjusted; (3) maintained in good operating condition; and (4) tested and examined at the prescribed intervals, in the proper manner, and found to be within tolerance. See the Approved Equipment List on the GIPSA web site.

5.2 TOLERANCES

a. Kettle Accuracy. ± l gram.

b. Beam/Scale Accuracy. ± 0.10 pound per bushel at any reading, deviation from test weights.

c. Test Weight Accuracy. ± 0.15 pound per bushel, mean deviation from the standard test weight apparatus using wheat.

5.3 MAINTENANCE

Test weight per bushel apparatuses must be maintained in good operating condition. Check and adjust them prior to initial use and periodically thereafter, as needed. Each maintenance check shall encompass the following:

a. Environmental Conditions. Ensure that the apparatus is mounted on a rigid table or base free of vibrations in a well illuminated, draft-free area.

b. Funnel Height and Position.

(1) Check the funnel height. The funnel's base should be exactly 2 inches above the top of the test kettle. You may use a ruler or other aid to measure; however, a length of 2-inch aluminum angle stock is recommended as a gauge, since it will rest on top of the kettle and maintain a perpendicular orientation to the top edge.

(2) Check the funnel position. The vertical center line of the funnel should pass directly through the vertical center of the test kettle. Adjust the funnel arm stop and kettle rest stops, if necessary.

c. Level. Check that the apparatus is in a true level condition with a spirit level placed on the top of the kettle. The apparatus must be level front to back and side to side. (The bubble level mounted on the scale base may not be accurate and should not be used for this purpose.) Level by using the adjustable front legs. Once level, tighten the adjustable leg-locking nuts securely.

d. Beam Balance. Determine if the beam is in balance by suspending the empty kettle from the beam load loop. Set the beam counterpoises to zero. The beam should indicate a balanced condition. If necessary, adjust the beam to balance with the balance ball.

e. Kettle Condition. Ensure that the kettle smooth milled, free of dents, and that the top surface is smooth, straight, and level. If dented or out-of-round, repair and test the kettle. (See Water Volume Test.)

f. Stroker Condition. Ensure that the stroker is smooth and straight, and that the edge has a round 3/16” radius. Overall dimensions are 12” x 1-3/4” x 3/8”.

g. Cleanliness. Ensure that the apparatus is clean. The test kettle may be cleaned with mild detergent and water. Do not use abrasive cleaners or steel wool.

h. Wear. Clean the beam knife edge pivot and bearings with a soft cloth and check for wear. If cracked or chipped, replace the pivot or bearing. Replacement shall only be done by a service company and under no circumstances shall the knife edge pivot be filed down.

5.4 TESTING

A complete test requires checking the weighing accuracy of the device by performing either a scale test or a beam test. This is followed by a test of the apparatus and kettle by performing a grain test. The water volume test may be substituted for the grain test.

a. Scale Accuracy Test. When an electronic or mechanical scale is used in lieu of the apparatus beam:

(1) No testing with weights is needed if the scale has been tested as described in Chapter 2, Grain Test Scales.

(2) If the scale has not been tested as described in Chapter 2 within the last 6 months, refer to Chapter 2 and perform the test, then proceed to the grain test.

b. Beam Accuracy Test. Do not perform this test unless the gram weights or special pound-per-bushel weights that are needed have been tested and certified as Class F. Show the date the weights were last tested in the remarks section of FGIS-927.

(1) Hang the kettle from the beam.

(2) Zero balance the beam using the balance ball, with the poises set on zero. Then record the load (0 g) and the poise indication on the Beam Test section of FGIS-927. (The 0.1-pound per bushel graduations shall be broken down into 1/4 increments and read as 0.025, 0.050, 0.075, 0.100.)

(3) The primary and secondary beams must be tested at approximately ½ and full capacity. If using special weights, test at 5, 10, 30 and 60 pounds per bushel. (If using gram weights, test at 71, 142, 425, and 850 grams. These weights are equivalent to 5, 10, 30, and 60 pounds per bushel, respectively.) For each of the four loads, place the appropriate weights in the kettle and adjust the poises to balance the beam. Record the beam reading.

Note any deviation using the method described in step 2, above.

(4) You may test the beams at additional loads if desired.

(5) Perform a sensitivity test on the beam by placing weights equaling 850 g (approximately 60 pounds per bushel) in the kettle and adjusting the poises to balance the beam. Then add 1 g to the kettle. This additional weight should be sufficient to move the beam from balance to the extreme top of the trig loop. (For test purposes, the 1 g shall be considered equal to the 0.10 pound per bushel sensitivity requirement.)

(6) Failure of the beam to pass the sensitivity test in step 5 or to yield results in error more than ± 0.10 pounds per bushel from the target weight in steps 2, 3, or 4 indicates that the beam is out-of-tolerance. Such beams must be replaced or repaired by a qualified mechanic before being used for official purposes.

c. Water Volume Test.

(1) When to perform a volume test on the test weight kettle.

(a) On a new (or recently repaired) test weight per bushel kettle.

(b) Whenever its accuracy is in question.

(c) At least every six months (recommended).

(2) Testing the test weight kettle using an even-arm balance.

(a) This test requires special equipment and a scale with a capacity of at least 2,000 g x 0.1 g. If such equipment is not available, contact the FGIS Field Office or headquarters.

(b) Thoroughly clean the kettle to be tested.

(c) Place a standard (Class F) weight(s) equivalent to 1,098.08 grams in the kettle. Then, place a piece of plate glass 5 inches in diameter by 1/4 inch in thickness on the kettle.

(d) Put the kettle (with the glass and weights) on the platter of an approved balance-type scale. Balance the scale by using the appropriate amount of counterbalance weights.

(e) Remove the kettle (with the standard weights and glass) from the platter (without disturbing the counterbalance weights).

(f) Place the kettle on the center of a towel. Remove the glass and the standard weight(s) from the kettle, then fill the kettle to overflowing with distilled water at 68 °F (± 1 degree). (Note: It is advisable to fill the kettle with water at 67 °F and then allow it to raise 1 degree before continuing the test.)

(g) Using a flashlight to find all air bubbles, eliminate the air bubbles from the inside of the kettle by touching the bubbles with a glass rod or thermometer. Slide the glass plate across the top of the kettle to remove the excess water. Then, leave the kettle exactly level-full with no air bubbles under the plate. If bubbles appear, remove the glass and begin the procedure again.

(h) Wipe off all moisture from the outside of the kettle and glass with a towel.

(i) Carefully place the filled kettle (with the glass covering plate in place) on the balance. Do not disturb any counterbalance weights previously set on the scale.

(j) Allow the pointer on the balance to come to rest. If the kettle and weights are in exact balance when the pointer stops oscillating, the capacity of the kettle is correct. If the pointer comes to rest at any other position, place a 1-gram weight on the light side of the balance. If the 1-gram weight is sufficient to swing the pointer to or across the balance mark, the error in the kettle capacity is within the allowable tolerance, and the kettle may be used.

(k) Should the 1-gram weight be insufficient to cause the balance-type scale's pointer to swing back, do not use the kettle until it is adjusted to yield the proper result.

(3) When using an electronic scale.

(a) Place the dry kettle and glass plate on the scale and record the tare weight to the nearest 0.1 gram in the Volume Test section of FGIS-927, Test Weight per Bushel Apparatus.

NOTE: Scale used for this procedure must be checktested with a capacity of at least 2200 g x 0.1 g.

(b) Follow the same water filling procedure as above (steps (f) to (h)).

(c) Place the filled kettle and glass plate on the scale and record the gross weight to the nearest 0.1 gram.

(d) If the difference between the second reading and the first reading is 1,098.08 ± 1 gram the kettle capacity is within the allowable tolerance and the kettle may be used.

(4) Adjusting the Test Weight Kettle. Small deviations beyond the 1-gram tolerance can be corrected by slightly bulging the bottom of the kettle in or out, depending on whether the volume needs to be decreased or increased.

(a) Place the kettle on a firm, smooth foundation in either an inverted or upright position, depending on whether the bottom is to be bulged in or out.

(b) Hold a soft piece of wood against the bottom of the kettle and strike the wood to bulge the kettle.

(c) After bulging the kettle slightly, test the kettle to determine if additional bulging is needed.

(d) After all kettle corrections are made, check to determine if the kettle rests in a level position. If the kettle has a tendency to rock, it may be possible to repeat the correction process so that the kettle volume is still correct and the kettle rests flat. If this cannot be done, replace the kettle.

d. Grain Test.

(1) Test Preparations for Initial, Periodic, and Supplemental Tests.

(a) The testing office (FGIS Headquarters, in the case of Field Office Standard equipment, or the Field Office, in the case of all other equipment) shall prepare test samples of Hard Red Winter wheat consisting of 1050 grams of dockage-free wheat.

(b) Provide three samples to each test unit operator for testing one apparatus.The samples shall, as practicable, represent the normal range of test weight results, 58 to 62 pounds per bushel.

(c) The testing office shall test the samples using the Headquarters Standard or Field Office Standard for test weight; next, place them in moisture-proof containers, numbered from one to three; and then, send them to the appropriate offices for testing.

(d) Do not provide results to the test unit operator at this time.

(2) Test Procedures.

(a) Test Weight Accuracy Test.

1 Place the closed anti-static zip lock bags near the test apparatus and allow them to equalize to room temperature for 24 hours prior to the test.

2 Thoroughly clean the test weight per bushel apparatus, zero balance it, and place the kettle in position.

3 Empty the first sample into a hand sieve bottom pan and mix it.

4 Position the hopper, close the hopper valve, and then pour the sample into the hopper.

5 Open the hopper valve and allow all of the grain to fall into the kettle, with the excess wheat overflowing into a catch pan. Stroke the kettle cleanly with three full-length zigzag motions (with the stroker held lightly on the kettle in a vertical position).

6 Place the kettle on the weigh beam of the test weight per bushel apparatus (or on the platter on an approved electronic scale), or pour it into an approved Toledo scale pan.

7 Weigh the sample and record the weight in the grain test section of FGIS-927. For beam type scales, record the weight to the nearest 1/4 graduation of a tenth pound per bushel. For electronic scales, record the actual weight indicated. For Toledo scales, convert the weight to pounds per bushel using the test weight conversion chart (Grain Inspection Handbook, Book II, Chapter I, Appendix A).

8 Repeat the procedure (steps 3 through 7) four more times for sample No. 1. Record all weights on FGIS-927. Examine the five test results, mark through the low and high weights, and average the three remaining weights. Record the average on FGIS-927.

9 Test the second and third samples in the same manner as the first. Record the results on FGIS-927.

(3) Test Record.

(a) Return the samples in moisture-proof containers to FGIS Headquarters or the Field Office, as appropriate.

(b) Upon entering results into Equipment Capability Testing (ECT) database, the testing office shall complete the form in ECT by recording their (standard) test results and then comparing the results of the two tests. If the average variation of the test results is within the allowable deviation, the apparatus is acceptable.

(c) In the case of out-of-tolerance equipment, document on FGIS-927 all pertinent facts and actions (including adjustments, retest, and follow-up actions).

CHAPTER 6
RICE EQUIPMENT

Contents

6.1 INTRODUCTION 2

6.2 TOLERANCES 2

6.3 DOCKAGE TESTERS 3

6.4 RICE SHELLERS 5

6.5 RICE MILLERS: Grainman No. 65 and McGill No. 3 17

6.6 TESTING 21

6.7 McGILL NO. 3 RICE MILLER - PARTS LIST 27

6.8 GRAINMAN NO. 64 RICE MILLER - PARTS LIST 28

6.1 INTRODUCTION

The inspection of rough rice requires the use of a dockage tester, rice sheller, and rice miller. To inspect brown rice for processing, only a rice miller is required. For official purposes, only use dockage testers, rice shellers, and rice millers that are: (l) types and models approved by FGIS; (2) maintained in good operating condition; (3) properly adjusted; and (4) tested and examined at the prescribed intervals, in the prescribed manner, and found to be within tolerance.

6.2 TOLERANCES

Rough Rice		
Dockage Tester	Total Dockage	± 0.50 percent[1]
Rice Sheller	Paddy Rice	± 3.0 percent
	Broken Kernels	± 3.0 percent
	Weight to Miller	± 1.0 percent
Rice Miller	Whole Kernels	± 2.0 percent
	Total Rice	± 1.5 percent

Brown Rice for Processing		
Rice Miller	Whole Kernels	± 1.5 percent
	Total Rice	± 1.0 percent

[1] All tolerances are mean deviation from standard.

6.3 DOCKAGE TESTERS

a. Maintenance and Alignment.

(1) General.

(a) Maintain dockage testers in good operating condition. Check and align them prior to initial use and periodically thereafter, as needed.

(b) Dockage testers used for rough rice inspections are identical to those used to inspect grain, except rice dockage testers are equipped with a special feed control assembly. See Chapter 4, "Dockage Testers," for general guidelines about installing, maintaining, aligning, and adjusting the dockage tester.

(2) Special Feed Control Assembly.

(a) The special feed control assembly consists of an adjustable, flow-retarding plate that is mounted vertically in the feed hopper and a cog wheel assembly that is used to vibrate the hopper feed valve. The purpose of the retarding plate is to restrict the flow of rough rice to the feed roll, thereby preventing an uneven feed through the aspirator assembly.

(b) When using the dockage tester for rice, the feed is controlled solely by the control knob on the special feed control assembly. Set the machine feed control, on the outside of the dockage tester, to the maximum open position.

b. Dockage Tester Adjustments. After the maintenance and alignment checks on a new (or recently repaired) dockage tester have been performed, adjust the camshaft speed, feed rate, and air control.

(1) Adjusting the Camshaft Speed. The procedure for adjusting the camshaft speed of rice dockage testers is the same as the procedure used to adjust the camshaft speed of grain dockage testers. See Chapter 4, "Dockage Testers," for step-by-step instructions.

(2) Adjusting the Feed Rate.

(a) Adjust the feed rate so a sample of long grain rough rice will clear the feed hopper in approximately 90 seconds and clear the bottom sieve in approximately 120 seconds.

(b) To determine whether the feed rate is correct, prepare a test sample of long grain rough rice consisting of 980 grams of dockage-free long grain rough rice and 20 grams of dockage.

(c) Set the feed rate to No. 6 and turn the dockage tester on. Then, pour the sample into the hopper while simultaneously starting a stopwatch. Stop the watch when the sample clears the hopper and note the time.

1 If the sample clears the hopper in less than 88 seconds, retard the feed-control knob (move slightly toward the “0” position).

2 If the sample clears the hopper in more than 92 seconds, advance the feed-control knob.

3 Recheck the feed rate and readjust, if necessary.

4 When the correct feed setting has been determined, mark the final setting on the dockage tester.

(3) Adjusting the Air Control Operation.

(a) Air-Control Knob. Determine that the air-control knob is tight on the shaft and does not have a tendency to slip when the knob is turned from one position to another. If the knob rocks on the shaft, the setscrew has probably worn a groove in the shaft. Before any air adjustment is made, correct the knob slippage problem by either:

1 Turning the shaft to a new position;

2 Reversing the ends of the shaft; or

3 Installing a new shaft.

(b) Air-Control Valve. Determine whether the air-control valve is completely closed when the air-control knob is in the extreme clockwise position. The position of the air-control valve can be checked by exerting counterclockwise pressure on the air valve arm with the fingers.

1 If the check shows the air-control valve is closed when the control knob is in the No. l position, the air-control valve is adjusted. However, if the check shows that the air-control valve is not completely closed, or if the air-control valve is closed before the indicator reaches the No. l position, adjust the air-control valve.

2 When adjusting the air-control valve, keep in mind that a slight discrepancy in the adjustment of the air-control valve significantly affects the amount of material removed. Therefore, all settings must be accurate.

(c) Adjusting the Air Control. The procedure for adjusting the air control of rice dockage testers is the same as the procedure used to adjust the air control of grain dockage testers. See Chapter 4, “Dockage Testers,,” for step-by-step instructions.

c. Dockage Tester Repairs. See Chapter 4, “Dockage Testers,”.

6.4 RICE SHELLERS
(Grainman No. 64, McGill, and Yamamoto)

a. Maintenance and Alignment.

(1) General.

(a) Maintain rice shellers in good operating condition. Check and adjust them prior to initial use (new or rebuilt) and periodically thereafter.

(b) Older shellers have a motor mounted on the top and a direct drive aspirator fan. Newer shellers have the motor mounted on a wood platform and a belt driven aspirator fan. Both variations are approved.

(c) The rice sheller has three basic parts:

1 A steel shelling roll that rotates in a clockwise direction at approximately 1500 rpm;

2 A soft roll that rotates in a counterclockwise direction at approximately 90 rpm; and

3 An aspirator assembly. The steel and soft rolls rake the hulls from the rice kernel as they pass between them, and then the aspirator discharges the hulls

Figure 1. Grainman Rice Sheller

(2) Power Cord. Inspect for wear.

(3) Placement. Install the rice sheller so that all sides of the machine are accessible to the operator. Mount the device on a solid, level base that is convenient to an electrical outlet.

(4) Lighting. Ensure that the lighting is sufficient for easy reading of the main roll clearance dial and for visual examination of the sample.

(5) Steel Shelling Roll. Check the sharpness of the steel shelling roll blades. An excessive amount of paddy kernels remaining in the machine is an indication of dull or worn blades. If the blades are dull, reverse or replace the steel shelling roll.

(6) Soft Roll. Check the soft roll; it should be smooth and square with the steel shelling roll. When available, use a Durometer to determine the firmness of the soft roll and average the readings. If the average reading is not within the 48 to 52 range, replace the soft roll.

(7) Leather Flaps. Check the leather flaps for holes. These flaps act to brake the high velocity flow of rice into the aspirator leg. Frequently, the flap closest to the steel shelling roll, which receives the most wear, will develop holes. If any holes are visible, replace the flap.

(8) Soft Roll Seal. Adjust the soft roll seal so it fits snugly against the soft roll without heavy pressure on the roll surface. The soft roll seal prevents the rice kernels from adhering to the soft roll and guides the shelled kernels to the aspirator leg and machine discharge. See page 6 12 for instructions for adjusting the soft roll seal.

(9) Cork Shelling Roll Seal. Inspect the cork seal. The seal prevents rice and rice hulls from escaping out the front of the machine. Position the seal so that when the spacing between the steel shelling roll and soft roll is between 12 and 15, as indicated on the roll clearance dial, the seal is just touching the steel roll. A slight whining noise will indicate proper contact.

(10) Air Hose and Connections. Ensure that the air hose connections between the main side casting and hull collector are tight, and that the hose is free of obstructions, holes, and cracks. Wrap the hose ends with plastic tape to provide a tight fit when the ends become worn.

(11) Lubrication. Lubricate all moving parts with a light machine oil (No. 20). Most machine bearings are of the oil impregnated type requiring very little lubrication. Use caution so that oil does not reach the soft roll; wipe off surplus oil immediately. Ball bearing type motors do not require service.

(a) Oil sleeve bearing motors at 6-month intervals with a light machine oil.

(b) Note, some steel shelling rolls are fitted with sealed ball bearings which do not require lubrication; some have grease fittings which must be filled periodically.

b. Rice Sheller Adjustments. After the maintenance and alignment checks on a new (or recently repaired) rice sheller have been performed, adjust the sheller's steel and soft rolls, feed control, and aspirator.

(1) Adjusting the Steel and Soft Rolls.

(a) The clearance or spacing between the steel shelling roll and the soft roll determines the degree of shelling. Too much clearance will provide under-shelled rice. Too little clearance will cause breakage of the rice, quickly dull the steel shelling roll blades, and also cause the soft roll to wear rapidly. Clearance between the rolls is controlled by the main roll clearance screw/dial assembly.

(b) To ensure the correct spacing between the rolls for the various types of rice, align the dial and the steel shelling roll. That is, zero the machine. The zero setting is a point at which there is no clearance between the steel shelling roll and the soft roll.

(c) Zero the sheller as follows:

1 Remove the cork seal.

2 With the machine running, hold a piece of soft chalk against the soft roll and draw a heavy chalk line on the roll.

3 Lower the steel shelling roll by turning the main roll clearance screw counterclockwise until the chalk line starts to fade. Disregard the shrill noise caused by the two rolls reaching close contact while zeroing the machine.

4 Fading of the chalk on the soft roll indicates little or no clearance between the rolls. The main roll clearance dial should indicate a setting of zero. If not, loosen the main roll clearance dial setscrew and position the dial to the zero indication. Retighten the setscrew.

5 Raise the main roll by turning the main roll clearance screw clockwise a few turns. Again, lower the main roll until the chalk line fades. Recheck the dial indication for zero reading. Reinstall the cork seal.

NOTE: The main roll clearance screw has 10 threads per inch providing 0.100-inch travel of the steel shelling roll for each complete revolution of the screw. The main roll clearance dial is calibrated in thousandths of an inch, which provides for a very accurate setting of the spacing between the steel shelling and soft rolls. The recommended settings or roller spacing for the various types of rough rice are listed in the Rice Inspection Handbook.

(2) Adjusting the Feed Control. The rough rice flow from the hopper to the sheller is controlled by the feed slide and screw assembly. Adjust the feed slide so 450 to 500 grams (approximately l pound) of rough rice will pass through the hopper in l minute. Offices that handle more than one type of rice may find it advantageous to have a feed slide and screw assembly for each type they usually examine. The assemblies can be easily removed and replaced when changing from one type of rice to another.

(3) Adjusting the Aspirator.

(a) Adjust the rice sheller aspirator to remove as many of the rice hulls as possible from the sample without removing any whole or broken shelled rice kernels.

(b) The flow of air through the aspirator is controlled by the aspirator leg and access assembly

(c) Moving the aspirator leg toward the rubber roll seal increases the air flow and also the amount of material removed from the shelled rice.

NOTE: Aspirator assemblies on the new model shellers are more efficient than the aspirators on the original machines. On some new models it has been necessary to install a small baffle in the air exhaust port to regulate the amount of material removed from the shelled rice.

c. Rice Sheller Repairs and Modifications.

NOTE: Locations needing replacement parts for shellers (refer to operators manual for part numbers) will need to contact Grainman directly for orders and also notify TSD of parts ordered. Parts will to be shipped to TSD for evaluation of meeting FGIS standards. Parts that meet FGIS standards will then be shipped directly to the location of original order. Parts that DO NOT MEET FGIS standards will be shipped back to the manufacturer for repair or modification.

CAUTION: Disconnect the power prior to performing any repairs or modifications

(1) Soft Roll Replacement.

(a) Remove the safety guard from the back of the sheller.

(b) Remove the double pulley V-belt and double pulleys (R-16 and R-18) (Figure 3).

(c) Loosen the setscrew holding the 9-inch pulley (R-13) to the 3/4-inch shaft (R-14) (Figure 3) and remove the pulley.

(d) The soft roll (F-9) (Figure 2) is secured to the 3/4-inch shaft (R-14) (Figure 3) by a locking screw. Rotate the soft roll until the locking screw is visible through the main side casting (R-5) (Figure 3) inspection port. Loosen the setscrew and remove the 3/4-inch shaft through the operating side of the machine. The soft roll will drop down and then can be removed from the hopper end of the machine.

(e) Insert the new roll, replace the 3/4-inch shaft, and center the soft roll between the main side castings. Align the flat milled section of the 3/4-inch shaft under the soft roll locking screw; tighten the locking screw.

(f) Replace the 9-inch pulley. Align the pulley setscrew with the flat end of shaft and tighten the setscrew. Replace the double pulley and the V-belt. Tighten the double pulley setscrew. Adjust the V-belt tension by turning the king pin (F-5) (Figure 2) with the 1/4-inch pin wrench.

(2) Removing, Reversing, or Replacing the Steel Shelling Roll (F-28) (Figure 2).

(a) Remove the safety guard from the back of the sheller.

(b) Raise the steel shelling roll housing with the lifting handle (F-24). Remove the screw(s) from the side of the hopper (F-l) facing the operating side of the machine. Remove the hopper and feed control assembly (F-2 and F-3) (Figure 2).

(c) Remove the V-belt from the motor pulley and the V-belt pulley (R-19) (Figure 3). Belt tension on original model shellers is reduced by loosening the motor mounting bolts and sliding the motor toward the hopper. On new model shellers, raising the steel shelling roll housing reduces belt tension.

(d) Remove the V-belt from the pulleys (R-16 and R-18) (Figure 3).

(e) Loosen the pulley (R-16 and R-18) (Figure 3) setscrews and remove the pulleys.

(f) Loosen the feeder check locking nuts and disconnect the feeder check adjusting screws. The checks will drop down clearing the steel shelling roll.

(g) Loosen the setscrews in the steel shelling roll bearing collars and remove the collars. A pin wrench inserted into the hole in the collar opposite the setscrews and tapped with a hammer will normally loosen it.

(h) Check the steel shelling roll shaft for burrs caused by the bearing collar setscrew. Remove the burrs, if any, with a fine file.

(i) Remove the four bolts from each of the steel shelling roll bearings. Remove the bearings and the steel shelling roll. The bearing housing has two small holes in the back side which covers the index pins in the main side castings. The bearing housings are not interchangeable from one side of the machine to the other.

(j) Start the bearing housing on the new or reversed steel shelling roll shaft and place the steel shelling roll in place. Slide the bearing housing against the main side castings and align the index pins in the holes in the back side of the bearing housings. Replace the bearing bolts and tighten.

(k) Reposition the feeder checks and connect the feeder check adjustment screws. Adjust the feeder checks to the “nips” of the rolls. Tighten the feeder check locking nuts.

(l) Center the steel shelling roll so that when the steel shelling roll housing is lowered, the side of the steel shelling roll clears both main castings.

(m) Replace and tighten the bearing locking collars.

(n) Replace the V-belt pulleys (R-16 and R-18) (Figure 3), replace the V-belt, align the pulleys, and tighten the pulley setscrews.

(o) Replace the V-belt pulley (R-19) (Figure 3), install the V-belt, align the pulley with the motor pulley, and tighten the pulley setscrew. Adjust the V-belt tension by sliding the motor away from the hopper end of machine. Tighten the motor mounting bolts.

(p) Replace the hopper and hopper feed assembly.

(q) Replace the safety guard on the back of the machine.

(3) Removing or Replacing the Aspirator Casting.

(a) Raise and lock open the steel shelling roll housing (F-24) (Figure 2).

(b) Remove the aspirator adjustment holder (F-16) (Figure 2).

(c) Remove the clamp bolts (F-19) holding the aspirator leg casting (F-20) (Figure 2) in position.

(d) Remove the aspirator leg casting by pushing slightly and then pulling it out of the control end of the machine.

(4) Replacing or Adjusting the Cork Seal.

(a) Raise and lock open the steel shelling roll housing (F-24) (Figure 2).

(b) Remove the cork seal hold down screw and remove the cork seal.

(c) Zero the machine before continuing. Turn the main roll clearance screw clockwise three full revolutions.

(d) Insert the new cork seal and tighten the cork seal hold down screw.

(e) Gently lower the steel shelling roll housing and rotate the steel shelling roll by hand using the motor V-belt. If the steel shelling roll does not bind on the cork seal, turn the machine on and slowly lower the main roll by turning the main roll clearance screw counterclockwise. The steel roll will cut the cork seal causing a shrill noise.

(f) Continue lowering the main shelling roll housing until the main roll clearance screw has been rotated counterclockwise 2-1/2 revolutions.

(g) Continue the grinding operation by turning the main roll clearance screw counterclockwise until the dial indicates a reading of 12 to 15.

(h) Continue running the machine until the shrill noise stops.

(i) Worn cork seals may be shimmed to prolong their life by placing a layer of one or more lengths of masking tape on the underside of the cork seal hold down plate, directly below the cork seal. When following this procedure it is necessary to wear-in the cork seal by the method described above.

(5) Soft Roll Seal Adjustment.

(a) Open the aspirator leg (F-17) fully. Loosen the clamp bolt (F-19) (Figure 2).

(b) Place your hand in the sample discharge port and push the soft roll seal snug against the soft roll.

(c) Tighten the clamp bolt and readjust the aspirator.

(6) Replacing the Leather Flaps.

(a) Remove the aspirator casting.

(b) Remove the cork seal by removing the cork seal hold down screw.

(c) Remove the two machine screws that secure the leather flap holding plate.

(d) Install the new leather flaps, replace the cork seal, and reinstall the aspirator casting.

(7) Replacing or Adjusting the Belts.

(a) Motor Drive V-Belt.

1 Old Model Sheller. Loosen the motor mounting bolts and slide the motor toward the hopper to loosen or remove the V-belt. Slide it away from the hopper to tighten the V-belt. After replacing the belt, retighten the motor mounting bolts.

2 New Model Sheller. Loosen the motor mounting bolts. Lift the motor to loosen or remove the V-belt. Lower the motor to tighten the V-belt. After replacing the belt, retighten the motor mounting bolts.

(b) Nine-Inch V-Belt. Loosen the king pin (F-5) setscrews at the main side casting (F-12 and R-5) (Figure 2 and Figure3). Turn the king pin with a 1/4-inch pin wrench to loosen, tighten, or remove the V-belt. After replacing the belt, retighten the king pin setscrews.

(c) Round Belt 4-Inch Pulley Belt. Loosen the setscrew holding eccentric stub-shaft (R-10). Using the knurled collar (R-ll) (Figure 3), turn the eccentric stub-shaft to loosen, tighten, or remove the round belt. After replacing the belt, retighten the setscrew.

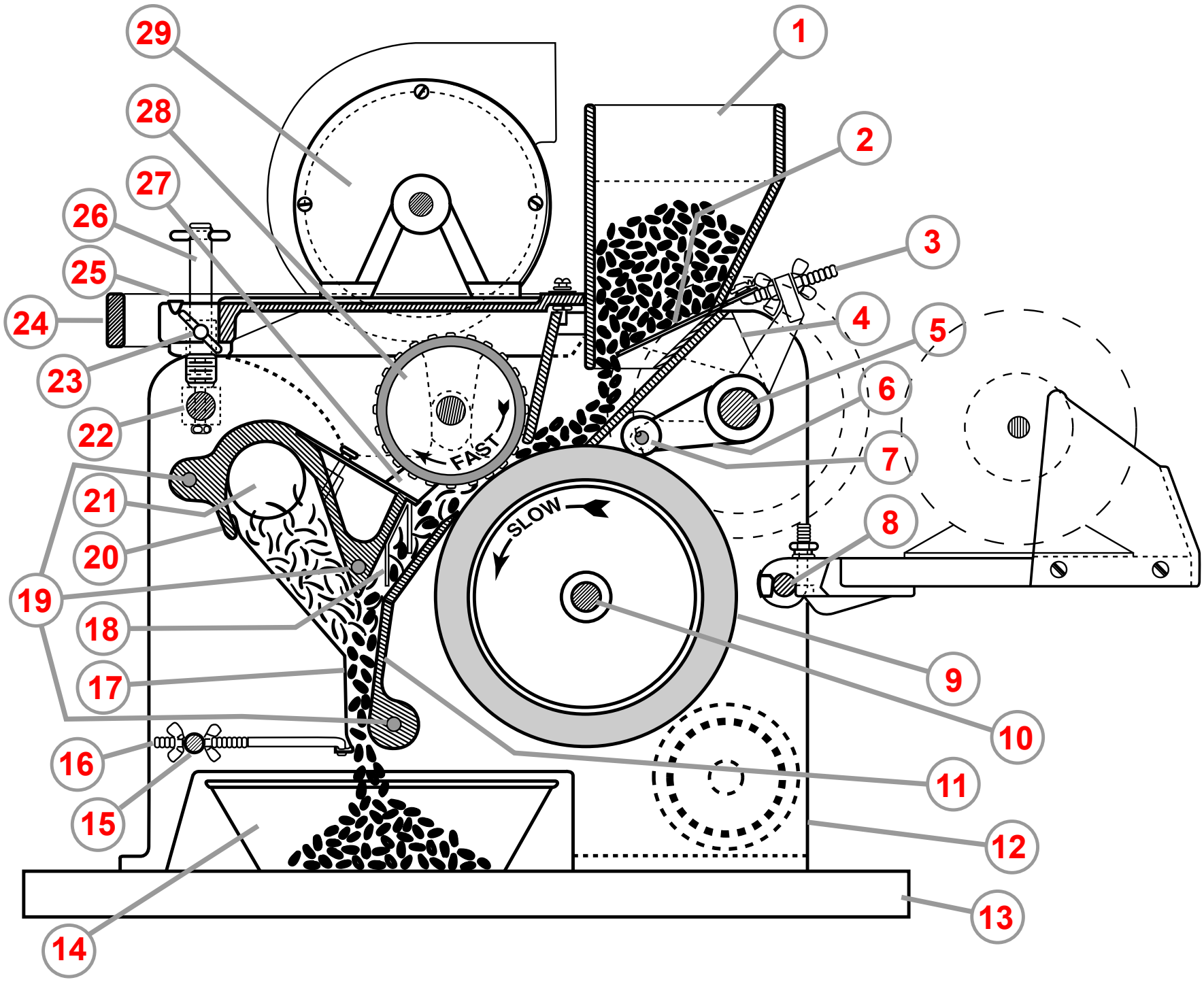

Figure 2. Grainman Sheller - Front Side

Grainman Sheller Parts			
1 Feed Hopper	9 Soft roll	17 Aspirator Leg	25 Main R. Dial
2 Feed Slide	10 Shaft	18 Leather Flaps	26 Main R. Screw
3 Feed Screw	11 Seal	19 Clamp Bolts	27 Cork Seal
4 Feed Checks	12 Main Casting	20 Asp. Leg casting	28 Steel Roll
5 King Pin	13 Base	21 Airport	29 1/3 Hp. motor
6 Vibrator Crank	14 Pan	22 Support	
7 Knurled roller	15 Spacer Bar	23 Locking Screw	
8 Spacer Bar	16 Asp. Adj. Rod	24 Lift Handle	

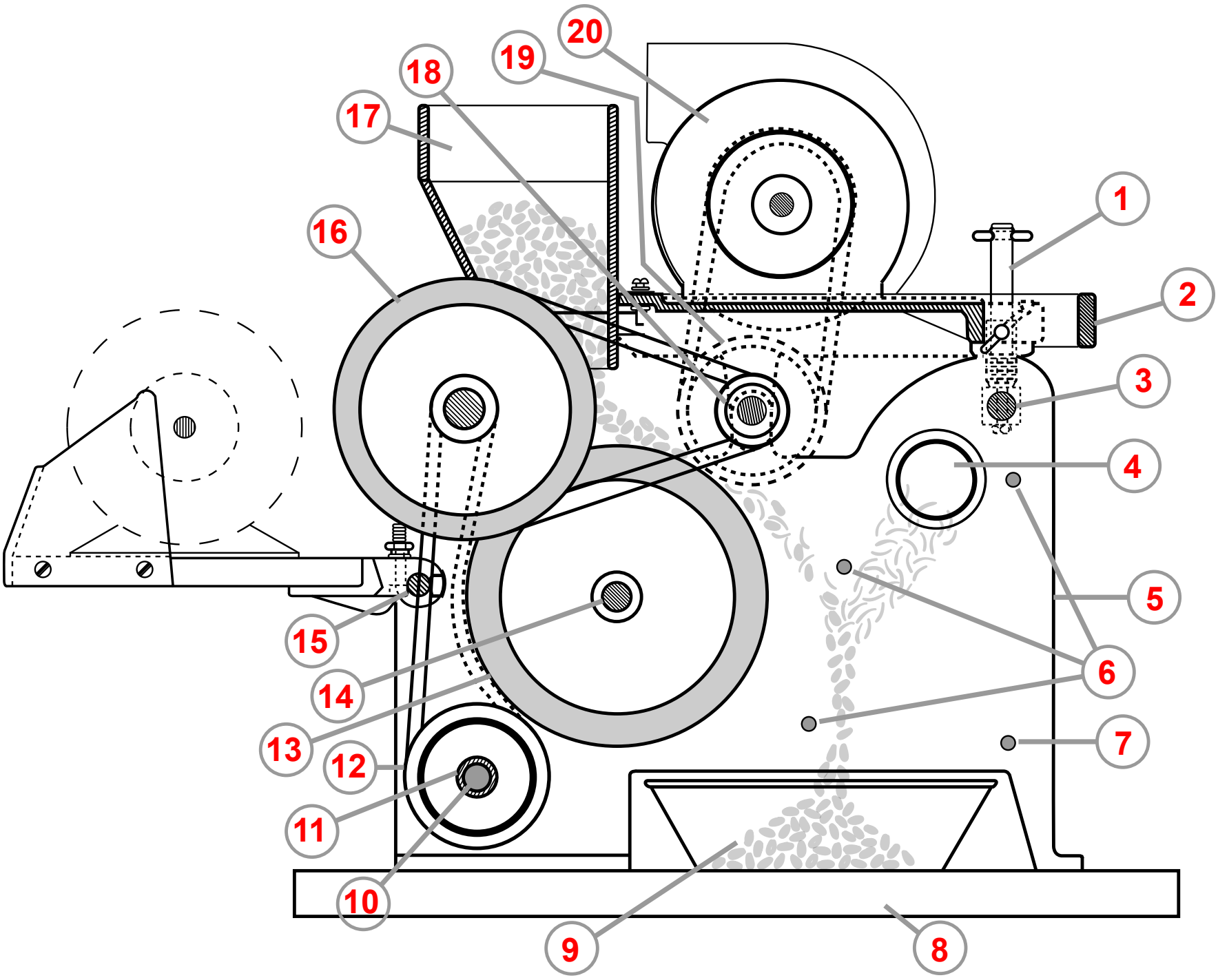

Figure 3. Grainman Sheller - Rear Side

Grainman Sheller Parts			
1 Adj. Screw	6 Clamp Bolt	11 Knurled Collar	16 Double Pulley
2 Lift Handle	7 Spacer Bar	12 4 inch Pulley	17 Feed Hopper
3 Support	8 Base	13 9 inch Pulley	18 2 in. V- Belt Pulley
4 Airport	9 Pan	14 Soft Roll Shaft	19 4 1/2 in. Pulley
5 Main Casting	10 Stub-Shaft	15 Spacer Bar	20 1/3 Hp. motor

d. Yamamoto FC2K Rice Sheller.

(1) The Yamamoto FC2K Rice Sheller is ONLY approved for processing California Medium and Short Grain Rough Rice (see Figure 4 and Figure 5).

(a) Equipment Setup and Standardization. Basic setup for the Yamamoto FC2k will require measuring impeller speed, hopper feed rate and adjusting to the following values.

1 The impeller speed should be adjusted to 3312 ± 4 RPM.

2 The hopper feed should be adjusted to allow rice samples to flow at 25 ± 1g/sec.

3 The airflow setting should be set to a value of 2 on an 8 point scale.

4 The air suction setting should be adjusted to the fully open position.

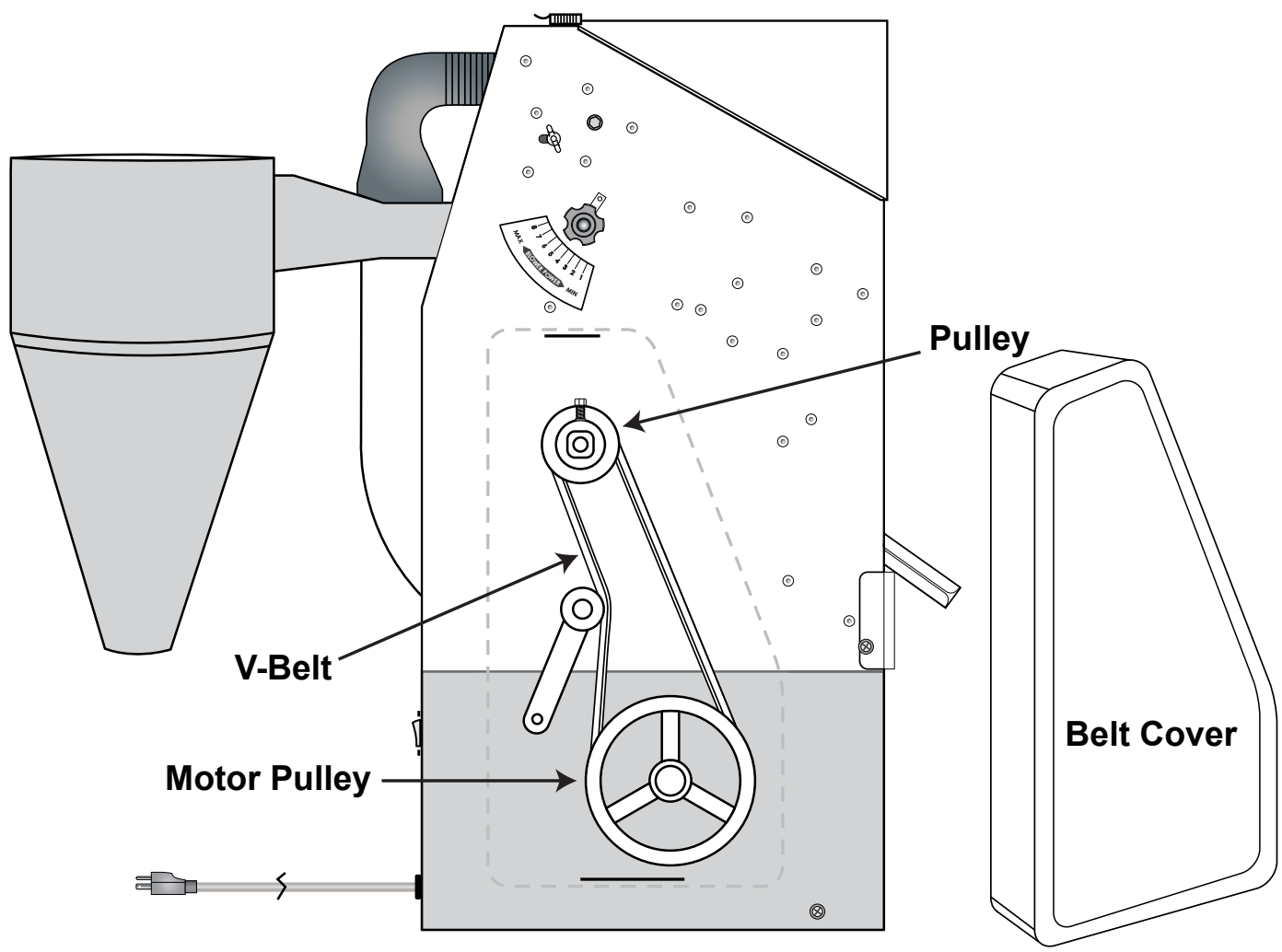

Figure 4. YAMAMOTO BELT ASSEMBLY

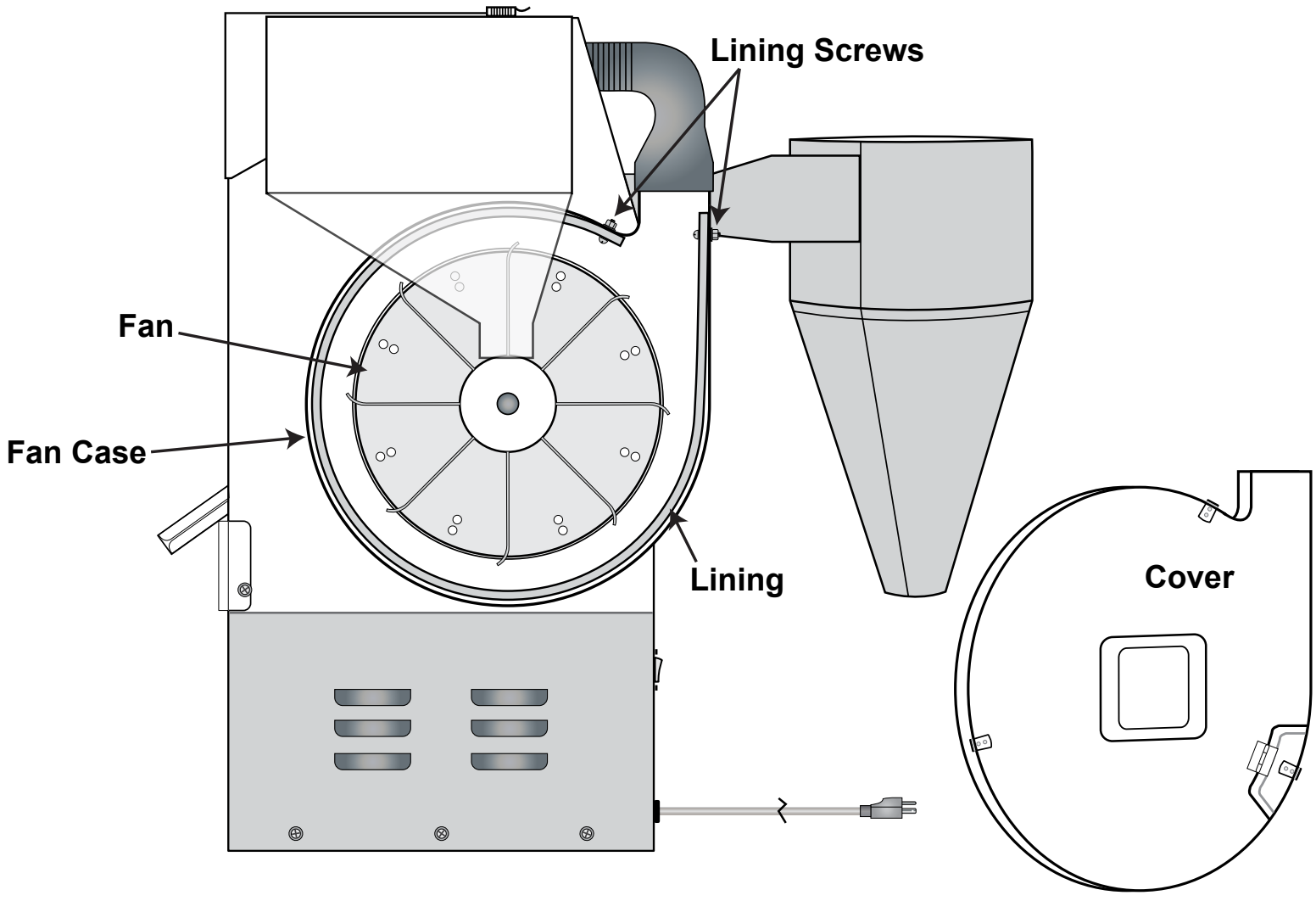

Figure 5. YAMAMOTO CHAMBER FAN

6.5 RICE MILLERS: Grainman No. 65 and McGill No. 3

a. Maintenance and Alignment. Maintain rice millers in good operating condition (see example of rice miller in Figure 6).Check and adjust them prior to initial use and periodically thereafter, as needed. A rice miller consists of an electric motor, milling chamber, weight lever and weights, and a timer. The degree to which a sample is milled is determined by the time the rice is agitated in the milling chamber and by the weight applied to the weight lever (see Figure 7). Milling times and weights for the various types of rice are found in the Rice Inspection Handbook.

b. Rice Miller Adjustments.

(1) Check the alignment of the screen with the motor shaft using the rice mill alignment gauges (Figure 8). Adjust for proper alignment and tighten the eccentric on both front and rear head plates.

(2) Milling pressure force (MPF) is determined by the aggregate of five forces bearing down on the rice during the milling process.

Figure 6. Grainman Rice Miller

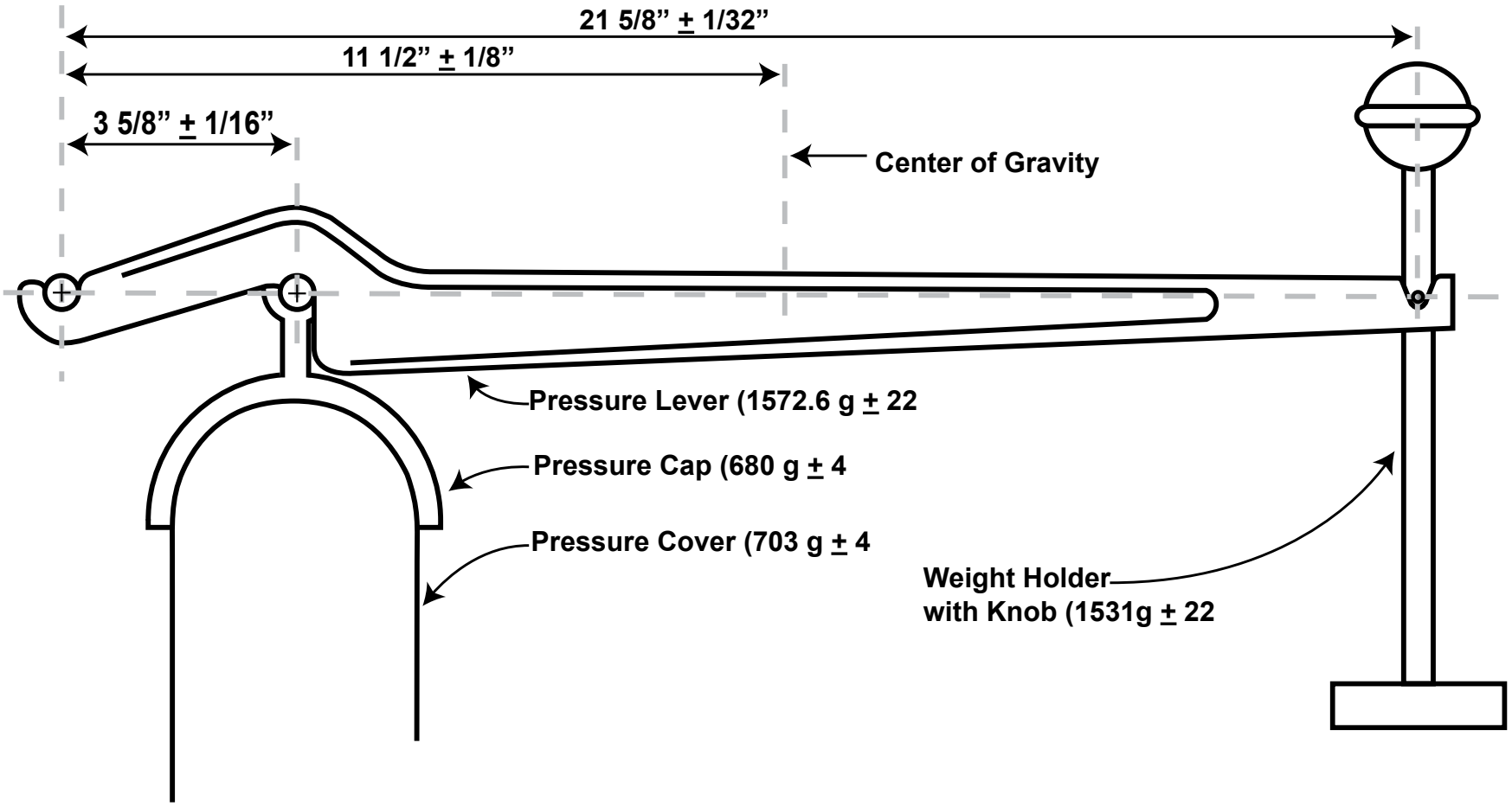

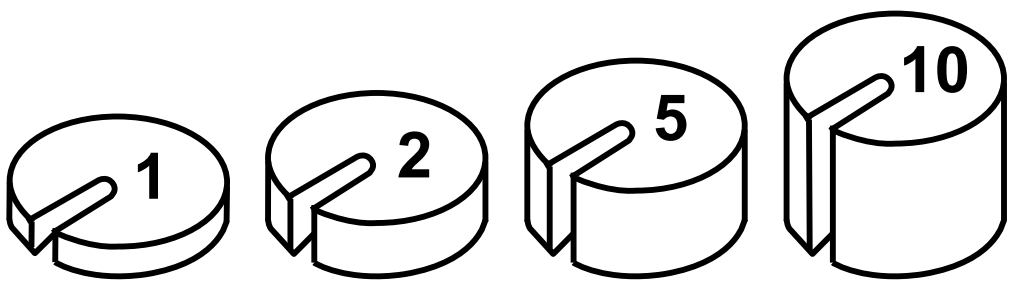

Weight tolerance ± 2 g

Figure 7. Rice Miller Lever Arm and Weights

(3) The weight lever, holder and mill weights are most critical to milling yield, since their weights are multiplied by a 6 to 1 weight lever factor.

(4) Check all new parts to ensure that only cast lever arms are used and that related parts are within the specifications.

c. Rice Miller Repairs.

NOTE: Locations needing replacement parts for millers (refer to operators manual for part numbers) will need to contact Grainman directly for orders and also notify TSD of parts ordered. Parts will be shipped to TSD for evaluation of meeting FGIS standards. Parts that meet FGIS standards will then be shipped directly to the location of original order. Parts that DO NOT meet FGIS standards will be shipped back to the manufacturer for repair or modification.

(1) Timer Control Mechanism and Motor Repairs. Repair of these items shall be made by factory personnel or qualified electric motor repair stations only.

(2) Milling Chamber Screen Replacement.

(a) Remove the inset allen head bolts from the spacer bars on the front-end plate (Figure 8).

(b) Remove the front-end plate.

(c) Remove the screen and insert the new screen. Insert screens having two breaker bars so that the upper breaker bar is on the left side as the screen is placed in the milling head.

(d) Replace the front-end plate; carefully align the screen on the screen locator pins.

(e) Replace the nuts on the spacer bars and hand tighten.

(f) Place two or three small wooden wedges between the screen and the middle bar, complete the tightening of the spacer bar nuts, and remove wedges. This procedure will provide sufficient space between the screen and the middle spacer bar for the insertion of the pressure cover.

(g) Check the alignment of the screen with the motor shaft using the rice mill alignment gauges. Adjust for proper alignment and tighten the eccentric on both front and rear head plates.

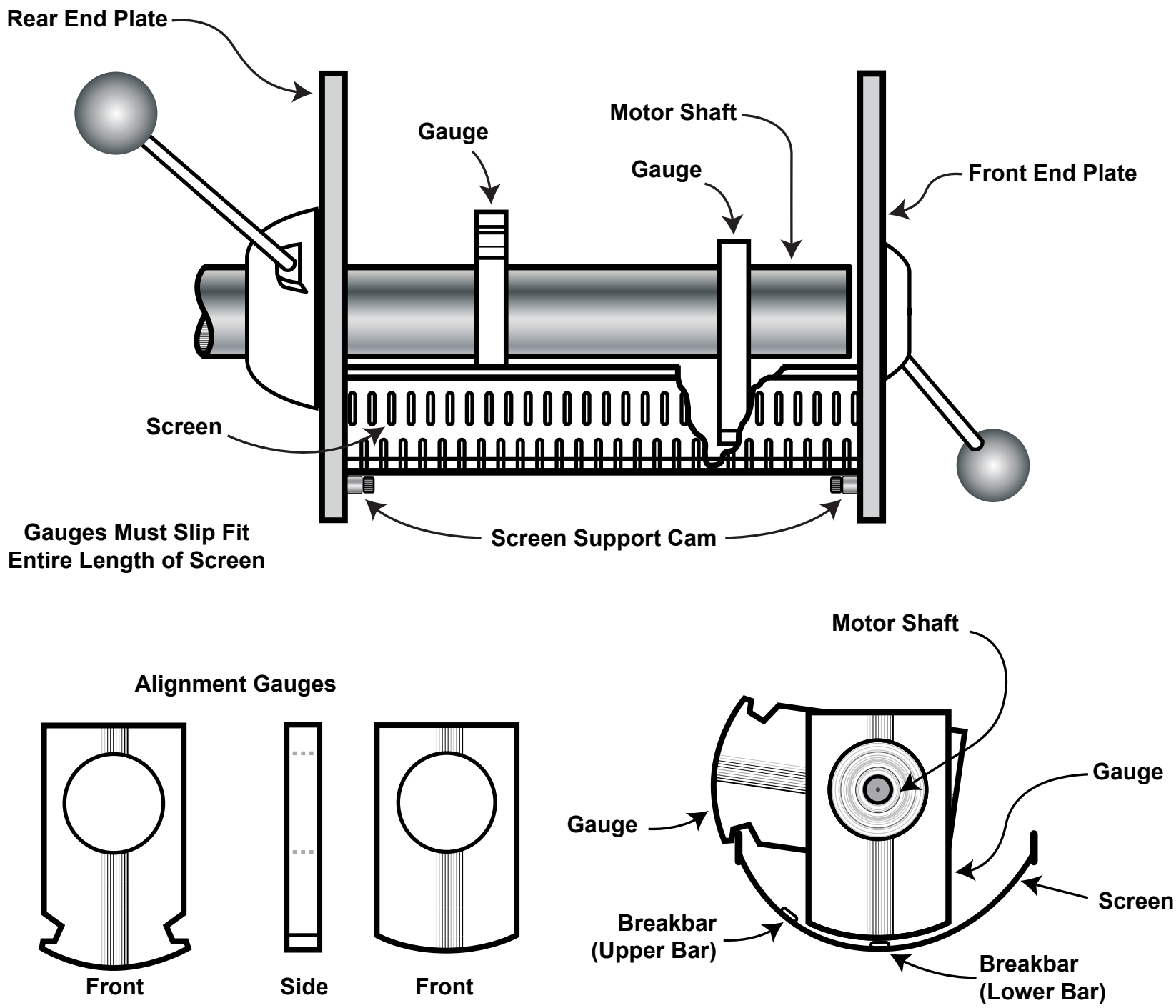

Figure 8. Rice Mill Alignment Gauges

6.6 TESTING

a. General. Test each dockage tester, sheller, and miller according to the testing schedule (periodic tests) and whenever the accuracy of the rice equipment is in question, including after all repairs (supplemental tests).

b. Test Preparations.

Initial, Periodic, and Supplemental Tests.

(1) The testing office (FGIS Headquarters, in the case of Field Office Standard equipment, or the Field Office, in the case of all other equipment) shall prepare test samples of long grain rough rice (or medium grain rough rice if the equipment is to be used in California). Either long grain rough rice or long grain brown rice may be used if only the rice miller is to be tested.

(2) A set of three samples shall be provided to each test unit operator for testing the equipment.

(3) The testing office shall test the samples using the Headquarters Standard or Field Office Standard for dockage; next, place them in moisture-proof containers, numbered from one to three; and then, mail them to the appropriate offices for testing. (The testing office shall retain a duplicate set of samples for testing with the Standard rice sheller and rice miller.)

(4) Each sample shall be tested in accordance with the test procedures.

c. Sample Preparation Procedures. Lot uniformity is of the utmost importance and samples must be well blended to ensure that sub-samples are representative for testing purposes.

(1) Long Grain Rough Rice.

(a) Weigh out three 1,944 gram samples of dockage-free long grain rough rice for each set of equipment that is to be tested.

(b) Identify the samples as Sample #1, Sample #2, and Sample #3.

(c) Divide each sample in half and further identify the halves as either “A” or “B.” Keep each set of samples together.

(d) To all “A” samples, add the following dockage: air - 8 grams, over-the-top - 3 grams, over-the-middle - 2 grams, and through-the-bottom - 15 grams.

(e) Do not add dockage to the “B” samples. The “B” samples are the duplicate samples that shall be retained by the testing office for testing with the Standard sheller and miller.

(2) Medium Grain Rough Rice.

(a) Weigh out three, 1,928 gram samples of dockage-free medium grain rough rice for each set of equipment that is to be tested.

(b) Identify the samples as Sample #1, Sample #2, and Sample #3.

(c) Divide each sample in half and further identify the halves as either “A” or “B.” Keep each set of samples together.

(d) To all “A” samples, add the following dockage: air (- 12 grams), over-the-top (- 4 grams), and through-the-bottom (- 20 grams).

(e) Do not add dockage to the “B” samples. The “B” samples are the duplicate samples that shall be retained by the testing office for testing with the Standard sheller and miller.

(3) Long Grain Brown Rice.

(a) Weigh out six, 750 gram samples of long grain brown rice for each rice miller that is to be tested.

(b) Identify the samples as Sample #1-A, Sample #2-A, Sample #3-A, Sample #l-B, Sample #2-B, and Sample #3-B.

(c) Send the “A” samples to the offices whose millers are to be tested; retain the “B” samples for testing with the Standard miller.

d. Test Procedures.

(1) Rice Dockage Tester.

(a) Thoroughly clean the dockage tester. Insert the appropriate sieves, set the air and feed controls to the proper positions, turn off or remove the sieve cleaner, and ensure that the sieve carriage bumper is properly adjusted (i.e., the rice travels down the center of the bottom sieve).

(b) Empty the first sample into a hand sieve bottom pan and mix it thoroughly. The light air dockage may tend to cling to the container; make an extra effort to retain all components of the sample. (Do not weigh the samples. Calculations shall be based on 1,000 grams.)

(c) Turn the tester on and pour the sample into the hopper.

(d) While pouring the sample into the hopper, activate a stopwatch. After the sample has made a break in the hopper, note the time that has elapsed and record it on FGIS-925, “Rice Checktest Form.” After the sample has cleared the bottom sieve, stop the stopwatch and record the total time that has elapsed on FGIS-925. While the dockage tester is still running, lightly tap the sieve carriage so that all loose material is expelled.

(e) Turn the machine off.

(f) After the machine has stopped, clean the sieves and place the material that was lodged in them into the appropriate separation pan. Handpick the lodged paddy kernels from the top and middle sieve separations and place them with the dockage-free sample; add lodged seeds and other grains from the top and middle sieves to the corresponding dockage separation.

(g) Pour the air, over-the-top, over-the-middle, and through-the-bottom sieve separations, as applicable, into individual pans.

(h) Weigh each separation to 0.01 gram and record the results on FGIS-925.

(i) Place each separation into individual envelopes identified by sample number and type of separation; identify the dockage-free sample and place it aside. (Testing offices should return the separations to the dockage-free sample and mail the sample to the Field Office or agency for testing.)

(j) Test the second and third samples in the same manner.

(2) Rice Sheller.

(a) Thoroughly clean the rice sheller and set the dial to the proper setting. Weigh the dockage-free sample and record its weight on FGIS-925.

(b) Turn the sheller on and pour the sample into the hopper. (Testing offices should use the duplicate dockage-free sample for testing their Standard rice sheller and rice miller.)

(c) While pouring the sample into the hopper, activate a stopwatch. After the sample has cleared the hopper, stop the stopwatch and record the total time that has elapsed on FGIS-925.

(d) After all of the sample has passed through the sheller, turn the sheller off.

(e) Tap the aspirator collector all around to loosen the hulls. Remove the hulls from the aspirator collector. If practical, weigh the hulls and record the weight on FGIS-925.

(f) Weigh the brown rice and record its weight on FGIS-925.

(g) Using an approved divider (refer to Chapter 7, Manual Sampling Devices), cut out a representative portion of about 100 grams from the brown rice sample. Split the 100 grams into a 40-gram portion for determining the percentage of broken kernels, and a 50-gram portion for determining the percentage of paddy kernels. Return the excess rice to the original brown rice sample.

(h) Using the appropriate portions, determine the percentage of paddy kernels and the percentage of broken kernels.

1 Weigh the portions to 0.01 gram and record the weight on a worksheet.

2 Handpick the portions, weigh the separations to 0.01 gram, and record the weight on a worksheet.

3 Determine the percentages by dividing the weight of each paddy and broken kernel separation by the exact weight of the appropriate portion before handpicking (x 100).

Example: 1.43 grams - paddy kernels picked x 100 = 2.8 %
51.65 grams - total portion weight

3.53 grams - broken kernels picked x 100 = 8.4 %
41.89 grams - total portion weight

(i) Record the percentages of paddy and broken kernels on FGIS-925.

(j) Recombine the paddy and broken kernel portions with the rest of the brown rice sample.

(k) Test the second and third samples in the same manner.

(3) Rice Miller.

(a) Set up the miller for testing the type of rice used for the test.

(b) Warm the miller by milling 750 grams of milled rice in three consecutive 30-second runs (2-pound weight).

(c) Thoroughly clean the miller.

(d) Place the pressure cover (metal sleeve) over the milling cylinder; insert the long end between the lower bars of the cylinder head and screen.

(e) Tilt the milling chamber so that the rice will flow uniformly into the milling cylinder. Pour the entire brown rice sample into the milling chamber.

(f) Close the milling chamber and return it to the milling position. Lock it down securely.

(g) Set the miller's timer switch for exactly 30 seconds. Position the saddle and weight arm on the milling chamber.

(h) Attach the weight holder to the lever arm with the prescribed weight on the weight holder.

(i) Turn the miller on and activate a stopwatch. After the miller stops, stop the stopwatch and record the time elapsed on FGIS-925.

(j) Reset the timer to 30 seconds, remove the weights from the weight holder for the brushing run, and turn the miller on again. Using a stopwatch, determine the time elapsed for the brushing run and record the time on FGIS-925.

(k) After the miller stops, remove the weight holder, weight arm, and saddle. With the chamber in the locked position, thoroughly clean the bran on the outside of the milling chamber before removing the pressure cover. Also clean the hopper beneath the machine of all bran particles before removing the cover.

(l) Place a metal quart container under the hopper opening. Remove the milled rice from the milling chamber by taking off the metal sleeve. Use caution when removing the milled rice so as little as possible of the bran gets mixed into the sample. After removal of all loose and lodged rice, remove the sample container.

(m) Thoroughly clean the miller of all bran; use a blunt instrument to clean the cylinder opening, crevices, and screen slots. Allow the sample to cool in an uncapped metal can to room temperature. Then weigh the rice sample and record the weight on FGIS-925.

(n) Determine the total rice percentage by dividing the total weight from the miller by 1,000 (x 100). (If only the miller is being tested, determine the total rice percentage by dividing the total weight from the miller by 750.) Record this percentage on FGIS-925.

Example: $\frac{\text{662 grams - total weight from miller}}{\text{1000 grams}} \times 100 = 66.2\ \%$

(o) Determine the percentage of whole kernels by cutting out a representative portion of 40 grams from the milled rice sample with an approved divider. Analyze the sample and weigh the whole kernel separation.

(p) To determine the whole kernel percentage, divide the whole kernel separation weight by the weight of the portion picked (x 100). Multiply the whole kernels by the decimal yield of the total rice. Record the whole kernel percentage on FGIS-925.

Example: Step 1. $\frac{\text{32.10 grams - whole kernels} \times 100}{\text{41.77 grams - total portion weight}} = 76.8\ \%$

Step 2. 76.8% (whole kernels) x .662 (total rice) = 50.9% whole kernel

(q) Place each separation into an individual envelope identified by sample number and type of separation. Test the second and third samples in the same manner as the first.

(4) Test Report.

(a) Return the separations and samples in moisture-proof containers to the testing office.

(b) Upon entering results into the Equipment Capability Testing (ECT) database, the Standard unit operator shall complete the form by recording the Standard unit's test results and then comparing these results to the test unit's results. If the average variation of the test results are within the allowable deviations, the equipment is acceptable.

(c) In the case of out-of-tolerance equipment, document on FGIS-925 all pertinent facts and actions (including adjustments, retests, and follow up action).

NOTE: Individual equipment may pass with no need for subsequent testing. On the next checktest attempt, only the equipment that did not pass, (e.g. Dockage tester (passed), Rice Sheller (passed), Rice Miller (Failed). On the next checktest attempt only the Rice Miller needs to be evaluated). However, you still must follow all prescribed procedures.

6.7 McGILL NO. 3 RICE MILLER - PARTS LIST

No.	Name	Stock Number	No.	Name	Stock Number
1	Vibro Insulator	5-57-02-075	32	Hex Nut	5-00-44-656
2	Control Panel	5-57-02-010	33	Lock Washer	5-00-50-518
3	Bolt 5/16”	5-00-40-428	34	Inside End Plate	5-57-01-010
4	Bolt 5/16”	5-00-40-430	35	Screen Support	5-57-01-070
5	Timer	5-57-02-060	36	Bolt 1/4”	5-00-40-278
6	Starter	5-57-02-050	37	Lower Screen Bar	5-57-01-020
7	Bolt	5-00-40-838	38	Screen	5-57-01-045
8	Spacer	5-57-02-045	39	Screen Bar Side	5-57-01-060
9	Hex Nut	5-00-44-524	40	Cylinder	5-57-07-015
10	Panel Support	5-57-02-015	41	Shaft Adapter	5-57-07-035
11	Bolt 5/16”	5-00-40-442	42	Shaft Adapter Key	5-57-07-005
12	Stud 5/16”	5-57-02-055	43	Setscrew 3/8”	5-00-49-410
13	Motor 3HP	5-00-23-256	44	Lever Spacer Bar	5-57-01-015
14	Clamp 3/8”	5-57-02-005	45	Pressure Cover	5-57-07-030
15	Greenfield Cable	5-57-07-020	46	Cover Saddle	5-57-05-010
16	Connector	5-57-07-010	47	Saddle Pin	5-57-05-015
17	Bolt 3/8”	5-00-40-462	48	Cover Bushing	5-57-05-005
18	Hex Nut	5-00-44-630	49	Weight Lever	5-57-07-070
19	Washer 3/8”	5-00-50-220	50	Upper Handle	5-57-06-020
20	Motor Mount	5-57-03-005	51	Support Pin	5-57-06-015
21	Plywood Base	5-57-04-010	52	Weight Support	5-57-06-010
22	Bolt 5/16”	5-00-44-000	53	1/2-lb Weight	5-57-07-050
23	Base Strip	5-57-04-005	54	1-lb Weight	5-57-07-055
24	Woodscrew #10	5-00-46-900	55	2-lb Weight	5-57-07-060
25	Hopper	5-57-07-025	56	5-lb Weight	5-57-07-065
26	Plastic Knob	5-57-01-030	57	Stud 4-3/16”	5-57-01-075
27	Stud 7”	5-57-07-045	58	Bolt 1/4”	5-00-40-288
28	Clamp Nut	5-57-07-005	59	End Plug	5-57-01-005
29	Alum. Upright	5-57-03-010	60	Outside End Plug	5-57-01-025
30	Bolt 1/4”	5-00-40-408	61	Locator Pins	5-57-01-065

6.8 GRAINMAN NO. 64 RICE MILLER - PARTS LIST

Item No.	Part No.	Description	Qty.
1	6400100	Right Hand Body Plate (Casting)	1
2	6400200	Left Hand Body Plate (Casting)	1
3	6400300	Steel Roll Support and Lifting Handle (Casting)	1
4	6400400	Aspirator Leg (Casting)	1
5	6400500	Fan Wheel (Casting)	1
6	6400600	Fan Housing (Casting)	1
7	6400700	Fan Bearing Support (Casting)	1
8	6400800	Rubber Roll (Casting)	1
9	6400900	Feeder (Casting)	1
10	6401000	Wing Nut 1/4”- 20	7
11	6401100	Feed Slide Spacer & Knurled Eccentric Bushing	1
12	6401200	Inlet Hopper (Casting)	1
13	6401300	Steel Roll Support Hold Latch (Casting)	1
14	6401400	1/4” Flat Washer	22
15	6401500	8/32” X 1-1/4” Round Head Machine Screw	1
16	6401600	Vibrator Crank (Casting)	1
17	6401700	1/4”- 20 Feed Slide Bolt	1
18	6401800	1/16”- 3/4” Cotter Pin (4106800) (631700)	1
19	6401900	Motor Base Cast Hinge (Casting)	1
20	6402000	Motor Belt Guard Support	1
21	6402100	Double Sheave (2”-7” Diameter)	1
22	6402200	Rubber Roll Sheave 9” Diameter	1
23	6402300	Idler Sheave	1
24	6402400	Steel Roll Off Set Sheave 3 - 3/4” Outside Diameter	1
25	6402500	Fan Sheave 2 1/2”	1
26	6402600	Steel Roll Drive Sheave 2” Diameter	1
27	6402700	1/4” Rubber Grommet	1
28	6402800	Feed Slide Gate	1
29	6402900	1/4” - 20 X 3/4” Round Head Machine Screw	1
30	6403000	Plastic Sample (630400)	1
31	6403100	Knurled Eccentric Roll	1
32	6403200	1/4”- 20 Hex Nut	7
33	6403300	8 - 32 X 1-1/2” Round Head Machine Screw (632600)	4
34	6403400	Feed Slide Spring	1
35	6403500	Kin Pin	1
36-1	6403610	Front Spacer	1
36-2	6403620	Rear Spacer	1
37	6403700	3/8”- 24 Hex Nut	1
38	6403800	Rubber Sheller Shaft	1
39	6403900	1” X 3/4” X 5/8” Bushing	2
40	6404000	3/4” Collar (Including 5/16 - 18 X 1/4 Socket Set Screw PN 6404100)	1
41	6404100	5/16”- 18 X 5/16” Socket Set Screw (Included in PN 6404000 & 6407000)	2
42	6404200	1/4”- 20 X 1/2” Socket Set Screw	3
43	6404300	Rubber Shelling Roll	1

Item No.	Part No.	Description	Qty.
43-1	6404301	3/8”- 16 X 1” Set Screw Square Head	1
44	6404400	No. 10 X 1” Round Head Wood Screw	16
45	6404500	10 - 24 X 1/2” Socket Set Screw	1
46	6404600	Cork Seal Assembly	1
47	6404700	1/4”- 20 X 1” Brass Knurled Screw	1
48	6404800	No.6 - 32 X 3/4” Pan Head Machine Screw	5
49	6404900	No.6 - 32 Hex Nut	5
50	6405000	Leather Flat Clamp	1
51	6405100	Leather Flat	1
52	6405200	Aspirator Adjustment Screw	1
53	6405300	3/8”- 16 X 5” Cap Screw	3
54	6405400	Rubber Pad (60 -18 - 00)	8
55	6405500	Sheet Metal Aspirator Leg	1
56	6405600	1/4”- 20 X 1- 1/2” Hex Head Screw	8
57-1	6405750	Electric Motor 50Hz (1/3 HP)	1
57-2	6405760	Electric Motor 60Hz (1/3 HP)	1
58	6405822	Switch 2PST (220/230 Volts)	1
59	6405900	Electric Motor Base	1
60-1	6406011	Electric Cord (110/115 V) with in-line Switch (610500)	1
60-2	6406022	Electric Cord (220/230 V) 4115900, 601900, 622700, 98SS33 & SB106210	1
61	6406100	7/8” X 5/8” X 5/8” Bushing	2
62	6406200	V-Belt A-28	1
63	6406300	5/16”-18 Wing Nut (Motor Base)	2
64	6406400	5/16” Flat Washer	3
65	6406500	Square Roll Support	10
66	6406600	Motor Base Hook Bolt	1
67	6406700	Round Belt (5/16” Diameter)	1
68	6406800	Take-up Shaft	1
69	6406900	Rear Belt Guard Stud	2
70	6407000	Take-up Set Collar (5/8”) Include 5/16”-18 X 1/4” Socket Set Screw PN 6404100	1
71	6407100	7/8” X 5/8” X 5/8” Bushing	1
72	6407200	Sheller Base Plate	1
73	6407300	1/4” Lock Washer	11
74	6407400	Rear Belt Guard	1
75	6407500	3/4” X 5/8” X 5/8” Bushing (Fan)	2
76	6407600	5/8” X 18” Fan Wheel Hex Nut	1
77	6407700	5/8” X 9 1/4” Fan Shaft	1
78	6407800	10 - 24 X 3/4” Round Head Screw	4
79	6407900	Gits Ball Oiler	1
80	6408000	5/16”- 18 X 3/8” Allen Set Screw	2
81	6408100	1/4”- 20 X 1” Hex Head Cap Screw	4
82	6408200	Roll Adjustment Screw Bushing	1
83	6408300	Roll Adjustment Screw	1
84	6408400	Roll Adjustment Screw Key	1
85	6408500	No. 10 - 32 X 3/8” Brass Knurled Screw	1
86	6408600	Roll Adjustment Dial Bushing	1

Item No.	Part No.	Description	Qty.
87	6408700	Roll Adjustment Dial	1
88	6408800	No. 8 Washer	6
89	6408900	Bearing Alignment Pins (6424 - 00)	4
90	6409000	3/8”- 16 X 1” Hex Head Cap Screw	12
91	6409100	3/4” Diameter SC 4 Bolt Flange Bearing	2
92	6409200	Steel Shelling Roll Assembly	1
93	6409300	Front Belt Guard Stud	1
94	6409400	No. 3 X 1/2” Brass Round Head Slotted Wood Screw (613500)	13
95	6409500	3/8” X 3/8” Shoulder Screw 1/4”- 20	1
96	6409600	No. 8 - 32 Hex Zinc Plated Nut	6
97	6409700	3/8” Lock Washer	9
98	6409800	Bel Guard Bearing	1
99-1	6409950	V- Belt 4L - 510 (50Hz)	1
99-2	6409960	V- Belt 4L - 500 (60Hz)	1
100	6410000	Front Belt Guard	1
101	6410100	Lock Screw Assembly	1
102-1	6410250	3.90 X 1/2” Bore Sheave (50Hz)	1
102-2	6410260	3.25 X 1/2” Bore Sheave (60Hz)	1
103	6410300	24” Husk Hose	2
105	6410500	Hose Cuff Connector	4
106	6410600	Dust Collector Top (Casting)	1
107-1	6410700	Dust Collector Cone	1
107-2	64107B0	Dust Collector Deflector (6337E0)	1
108	6410800	Dust Collector Hold Column	1
109	6410900	Dust Collector Hold Column Flange	1
110	6411000	Dust Collector Base	1
111	6411100	Dust Collector Cup (2 Quart Size)	1
112	6411200	Dust Collector Column Cap	1
113	6411300	Drive Guard Bolt 5/16” X 1-1/4” Carriage Bolt	1
114	6411400	T Bolt Handle	1
115	6411500	U - Drive Screw	15
116	6411600	No. 10 - 24 X 1-1/2” Screw	3
117	6411700	No. 10 Flat Washer	3
118	6411800	10 -24 Hex Nut	3
119	6411900	3/8” Flat Washer	6
120	6412000	No. 6 Lock Washer	5
121	6412100	8 - 32 X 5/8” Round Head Screw	1
122	6412200	Connector Nut	1
123	6412300	Cord Connector	1
124	6412400	3/8 - 16 X 3/8” Socket Set Screw	1
125	6412500	Feed Slide Bolt Spacer	1
126	6412600	1/4 - 20 X 5/16” Socket Set Screw	1
127	6412700	Serial Number and Model Name Plate	1
128	6412800	Serial Number and Model Name Plate Screws	4

CHAPTER 7
MANUAL SAMPLING DEVICES

Contents

7.1 INTRODUCTION 2

7.2 BAG TRIERS 2

7.3 LADLES 4

7.4 ELLIS CUP SAMPLERS 5

7.5 BULK-LOT TRIERS 6

7.6 OIL SAMPLERS 7

7.7 PELICAN SAMPLERS 10

7.8 DIVIDERS 11

7.9 EXAMINATIONS 15

7.1 INTRODUCTION

For official purposes, only use manual sampling devices that are (I) a type and model approved by FGIS; (2) maintained in good operating condition; (3) properly adjusted; and (4) examined at the prescribed intervals, in the proper manner, and found to be within tolerance. The List of Approved Equipment is available on the GIPSA website.

7.2 BAG TRIERS

a. Tapered Bag Triers.

(1) Description. Tapered bag triers are constructed of stainless steel and are characterized by a sharp point, a tapered body, and an open throat. These triers are available in lengths from 6 to 12 inches. See figure I.

(2) Usage. Tapered bag triers are used to sample closed bags of powdered andgranular commodities.

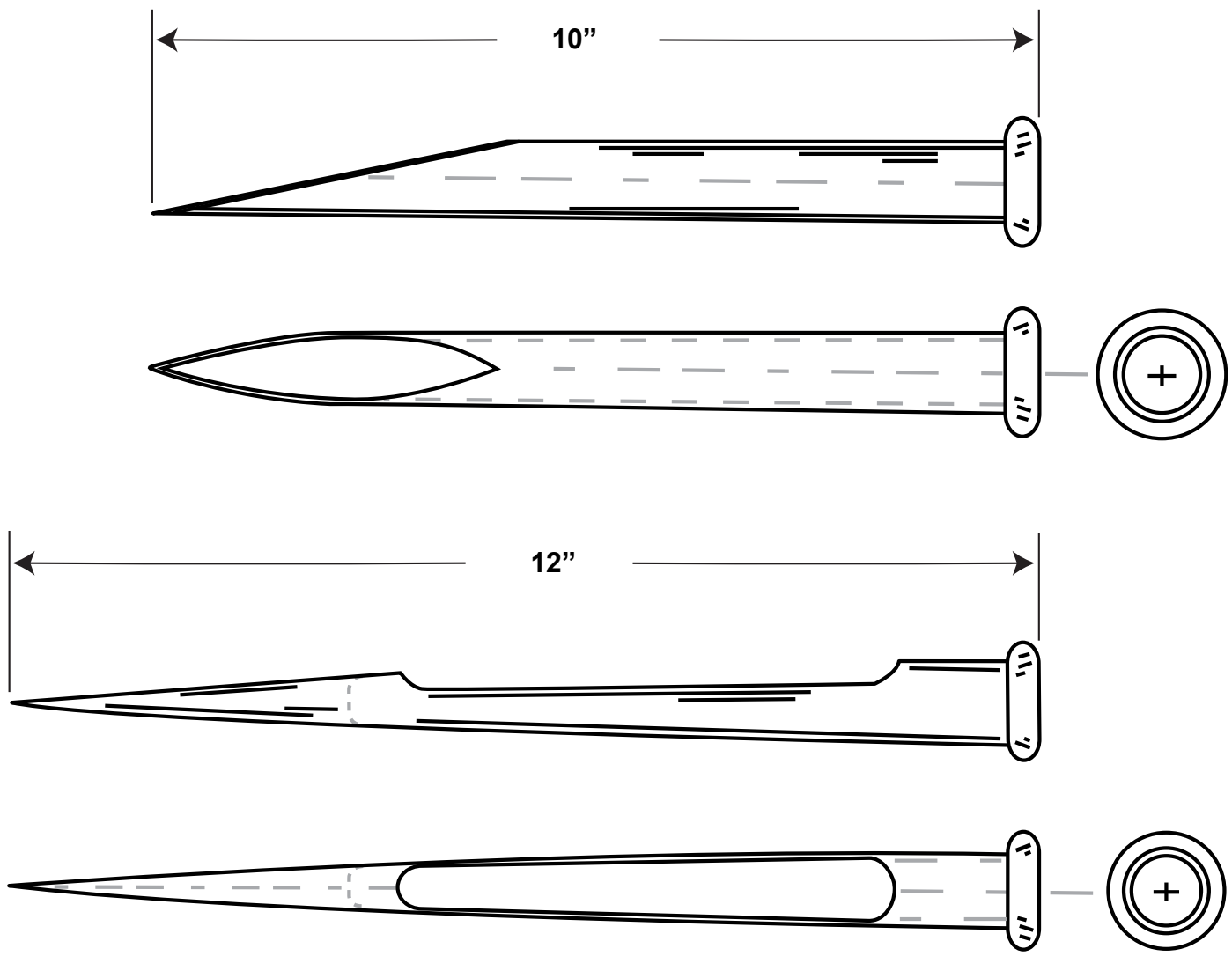

Figure 1. Tapered Bag Triers

b. Rice Bag Triers.

(1) Description. Rice bag triers are similar in appearance to tapered bag triers. The filling ports of the rice bag triers, however, have specially designed milled edges which reduce bag damage. See figure 2.

(2) Usage. Rice bag triers are used to sample closed bags of rice.

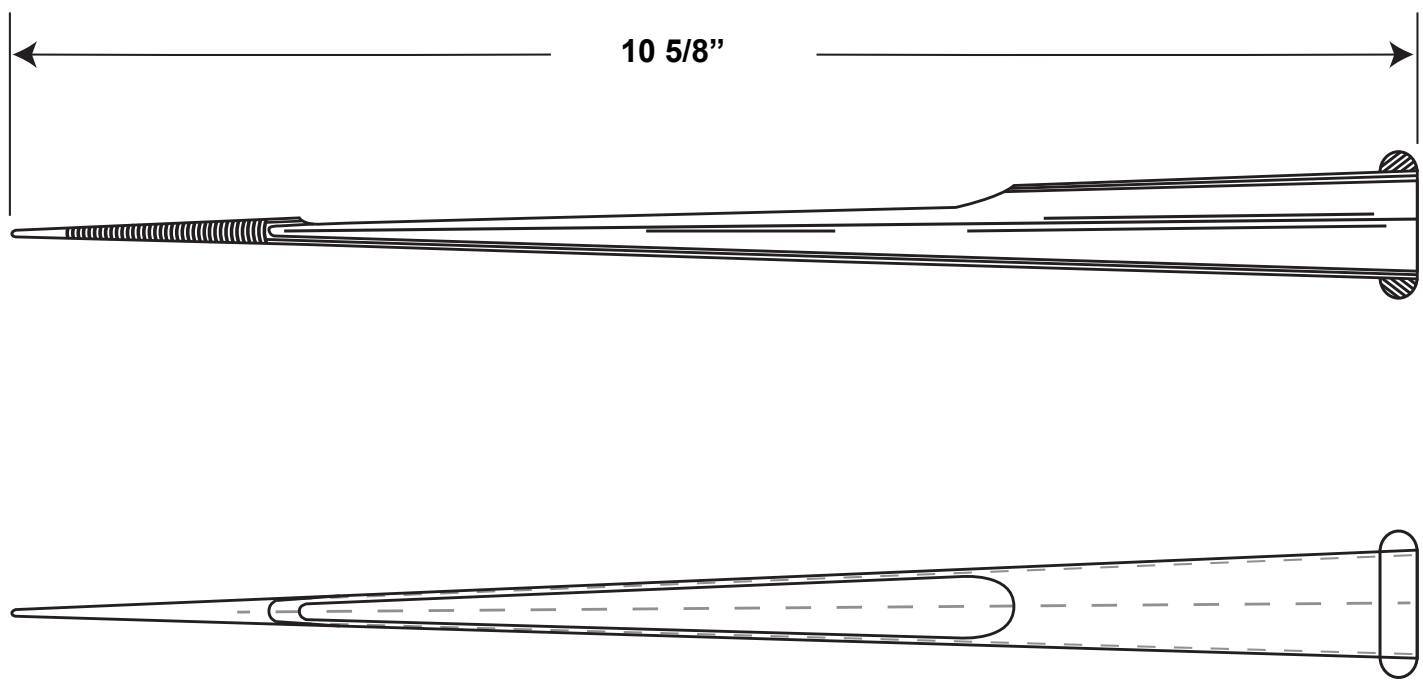

Figure 2. Rice Bag Triers

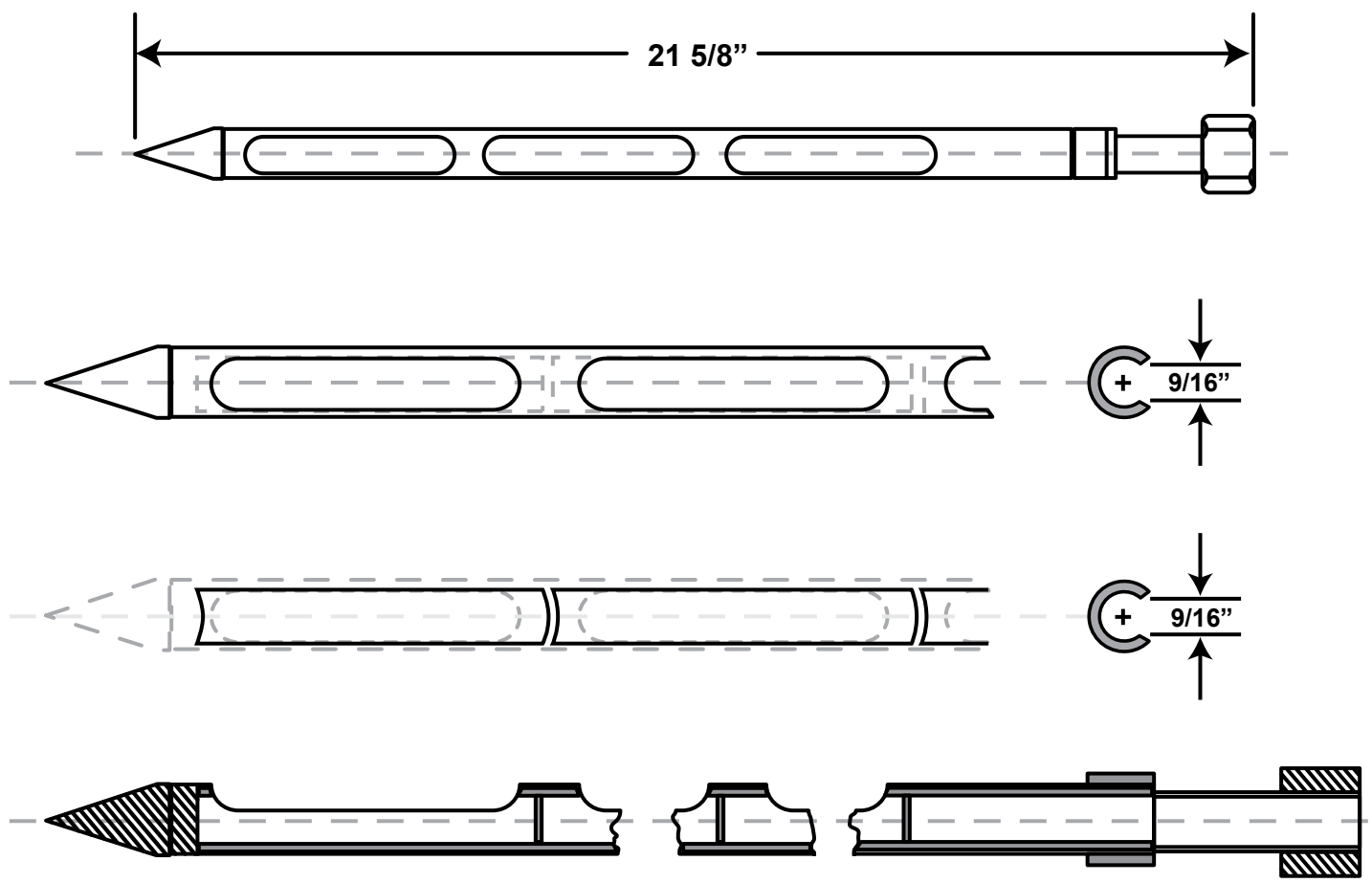

Figure 3. Double Tube Bag Trier

c. Double-Tube Bag Triers.

(1) Description. Double-tube bag triers are constructed of stainless steel or chrome plated brass. These triers are available in various lengths and diameters, and in both closed-ended and open-ended models.

(2) Usage. Double-tube bag triers are used to sample closed and open bags of powdered and granular commodities.

d. Single-Tube Open-Ended Bag Triers.

(1) Description. Single-tube open-ended bag triers are constructed of stainless steel tubing.

(2) Usage. These triers are used to sample open bags of dry, powdery commodities when removal of a core of material is desired.

e. Maintenance.

(1) Cleanliness. Keep very clean to prevent product contamination.

(2) Points. Keep points sharp and smooth.

(3) Protection. Store in sheaths or other suitable containers to protect the triers from damage.

7.3 LADLES

a. Description. Ladles are constructed of polyethylene and are available in various sizes.

b. Usage. Ladles are used to sample small granular or fine powdery commodities in open bags.

c. Maintenance.

(1) Cleanliness. Clean after each use.

(2) Protection. Store ladles in clean containers or bags.

7.4 ELLIS CUP SAMPLERS

a. Description. Ellis cup samplers are constructed of high tensile strength aluminum. Air vents, under the handle, exhaust trapped air as the cup fills.

b. Usage. Ellis cup samplers (figure 4) are used to sample grain as it moves on conveyor belts. When properly used, the cup will obtain a vertical cross section sample at the point where the cup is inserted into the grain.

c. Maintenance.

(1) Cleanliness. Keep air vents clean and open.

(2) Lip. When the front lower lip of the cup becomes sharp or is broken off, replace the sampler.

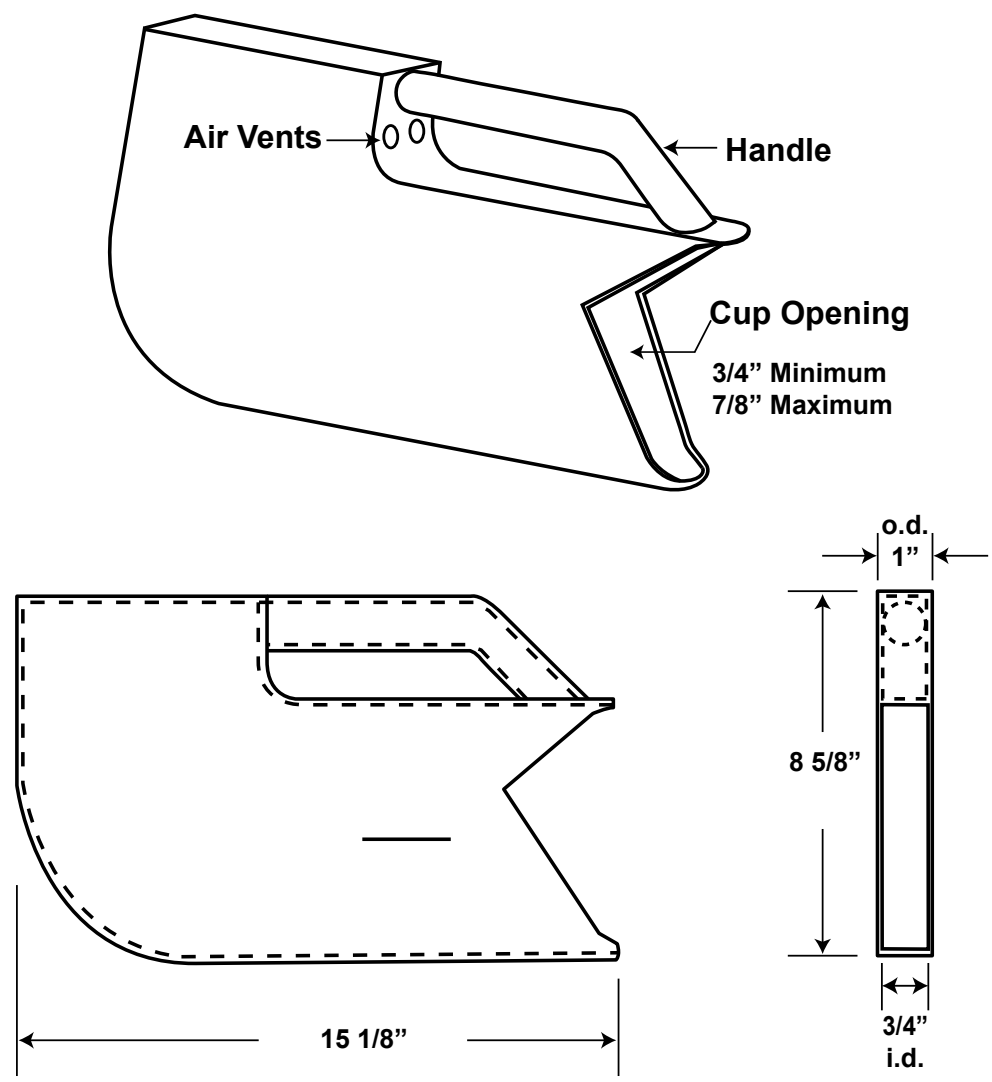

Figure 4. Ellis Cup Sampler

7.5 BULK-LOT TRIERS

a. Grain, Rice and Commodity Triers.

(1) Description. These triers (figure 5) are commonly manufactured from brass or aluminum, but they may also be fabricated from stainless steel. They are of double-tube construction with the inner tube being compartmented and are available in various lengths; e.g., 5 foot (-11 compartments), 6 foot (-12 compartments), 8 foot (-16 compartments), 10 foot (-20 compartments), 12 foot (-20 compartments).

(2) Usage. These triers are used to sample bulk stationary lots (e.g., trucklots, railcar lots, and bargelots) of grain, rice, and commodities.

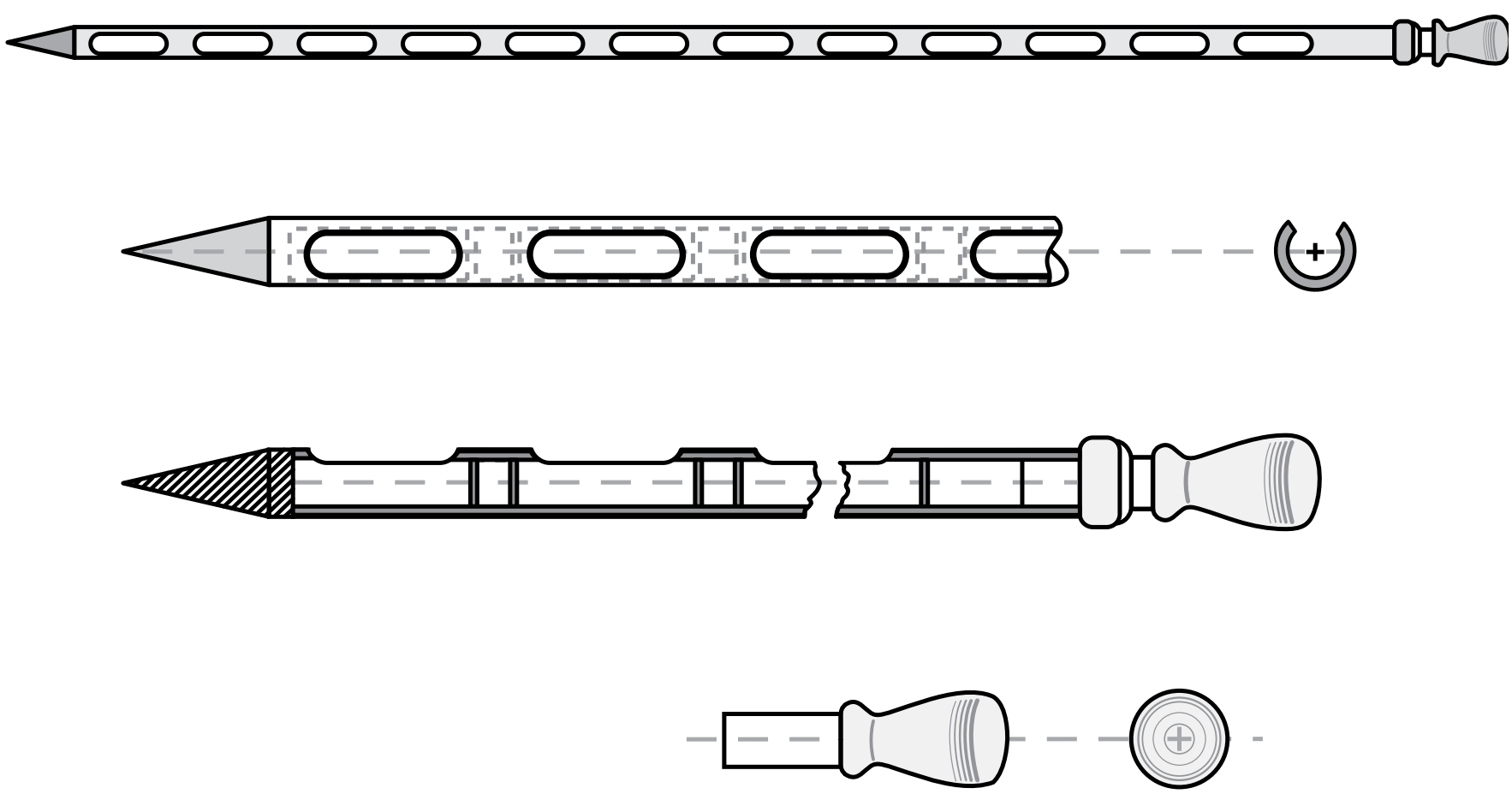

Figure 5. Grain, Rice, and Commodity Trier

b. PVC Flour Triers.

(1) Description. PVC triers are constructed of PVC pipe of various diameters, cut to the length required to reach the bottom of the carrier.

(2) Usage. These triers are used to sample bulk-lots of flour and other powdered commodities.

c. Maintenance.

(1) Trier Handles. Protect the handles to avoid chips and cracks which can cause blistering of the sampler's hands.

(2) Locking Pins. Do not remove the pins which secure the inner tube within the outer tube. If broken, replace the pin. Replacement locking pins can be easily made from size I (one) steel taper pins.

(3) Dents. Severe dents in the outer tube will usually render a grain trier useless. If the tubes can be separated and the dent is in an accessible location, the dent may be removed using a rounded hardwood dowel and mallet. Tube expanders, which are available in some machine shops, may also remove dents.

(4) Protection. Carry or store triers with their openings facing downward. Triers are more rigid in this position and less susceptible to bending.

7.6 OIL SAMPLERS

a. Tank Car Samplers.

(1) Description. Tank car samplers are constructed of 2-inch diameter, rigid aluminum tube sections. When assembled, the sections form a tube 10 feet long. The tip section is fitted with a tight fitting aluminum valve that is controlled by an aluminum rod attached to the outside of the tube sections.

(2) Usage. Tank car samplers are used to draw a core sample of oil from tank cars. The samplers are inserted into the car. Upon reaching the bottom of the car, the valve is closed trapping the core within the tube. Some models of this device are fitted with a discharge valve in each section to facilitate removal of the sample from the tube as the tube is withdrawn from the tank.

b. Drum Thief Samplers (Blust Drum Sampler).

(1) Description. Blust drum samplers are constructed of stainless steel. They have a valve in the tip end of the trier that is controlled by a stainless steel rod running through the center of the tube between the valve and the handle. Operation is the same as the tank car samplers.

(2) Usage. These samplers (figure 5) are used to draw core samples from oil in drums of 55 gallon capacity or less.

c. Glass Tubes (Pipettes).

(1) Description. Pipettes are constructed of laboratory glass. They are available in various lengths.

(2) Usage. Pipettes are used to sample fluid in small containers.

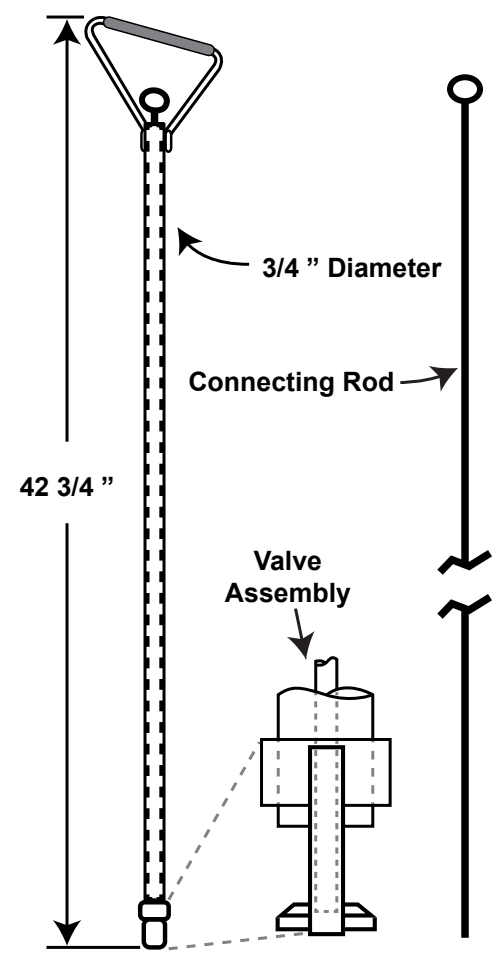

Figure 6. Blust oil Sampler

d. Zone Samplers (Curtis and Tompkins Sampler).

(1) Description. These samplers use a single suspending chain or tape. The plunger and valve of this device open as the sampler is lowered into the oil and close when the unit is stopped or raised.

(2) Usage. These samplers are used to obtain samples of oil at various levels within storage tanks or other large containers.

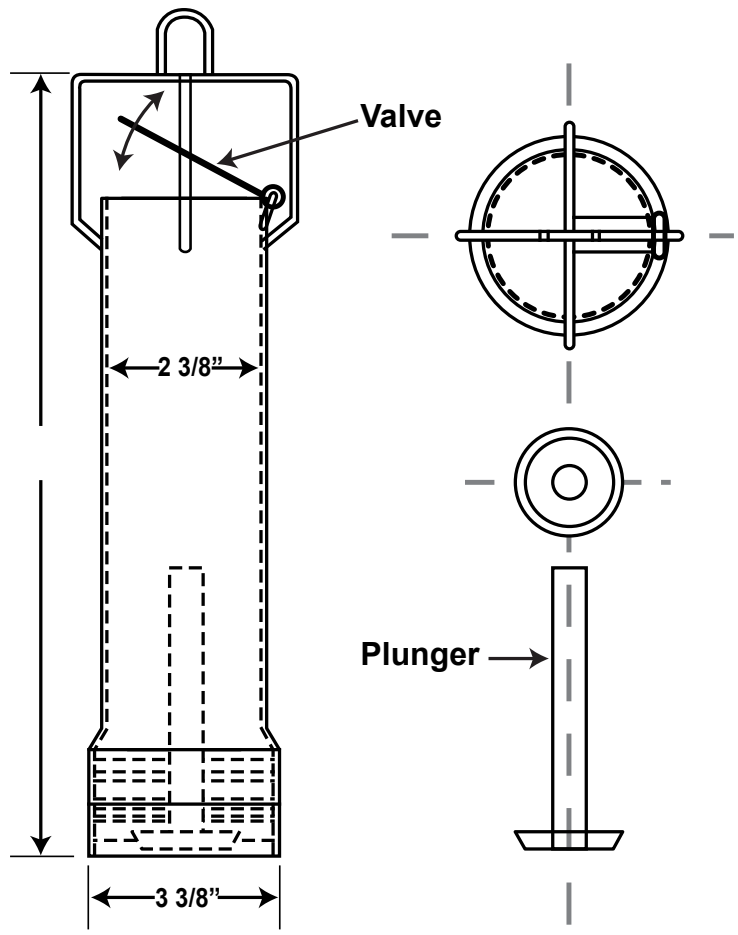

Figure 7. Curtiss and Tompkins Oil sampler (1 Quart capacity)

e. Bacon Bomb Samplers.

(1) Description. These samplers, which are similar to the Curtis and Tompkins samplers, are actuated by pulling a chain that is attached to a plunger.

(2) Usage. These samplers are used to obtain samples of oil at various levels within storage tanks or other large containers.

(3) Maintenance. To function properly, oil sampling devices must be kept clean by washing after each use with a mild solvent or detergent. If a detergent is used, thoroughly rinse the sampler in clean water.

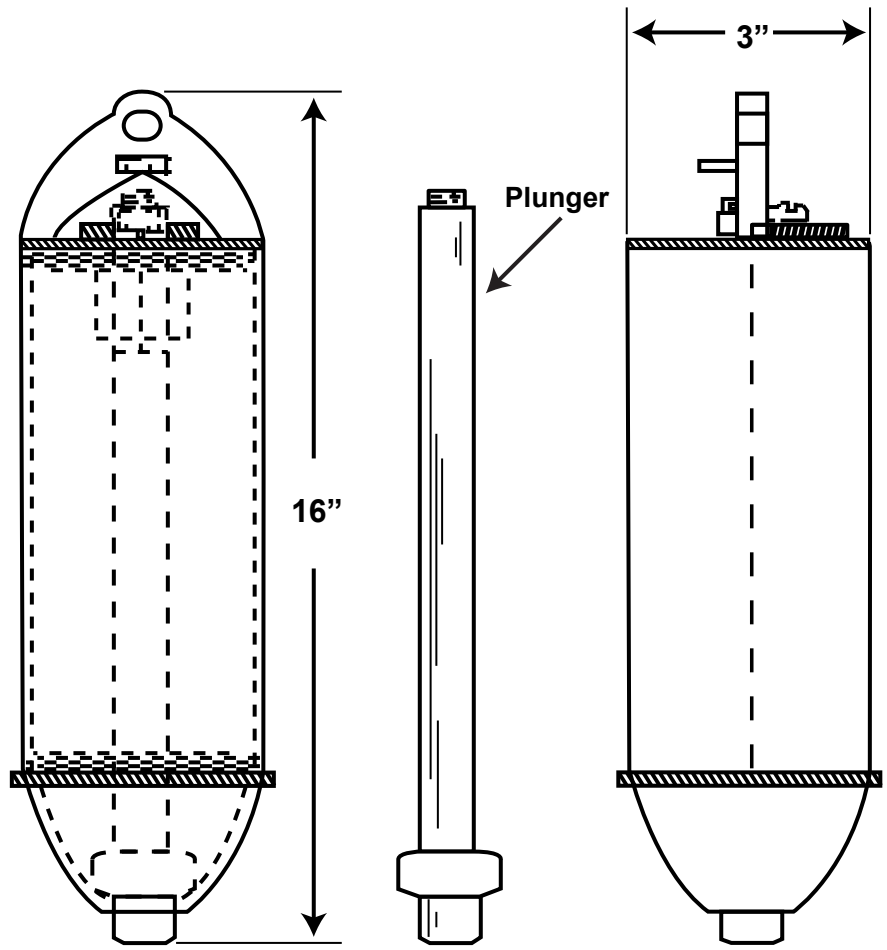

Figure 8. Bacon Bomb Oil Sampler

7.7 PELICAN SAMPLERS

a. General.

(1) Description. Pelican samplers are constructed of a russet, top-grade cowhide pouch attached to a metal frame. The frame is designed to accept a wood or metal handle of suitable length to facilitate reaching the grain stream.

(2) Usage. Pelican samplers are used to obtain samples from a free-falling stream of commodities.

b. Maintenance.

(1) Storage. Pelican samplers should be stored in a manner to avoid distorting the leather pouch or frame.

(2) Pouches. Pouches shall not be treated with leather preservatives since the preservative may impart an oil odor to the grain sampled with the pelican.

(3) Pelican Handles. Pelican handles shall be kept smooth and be secured to the pouch frame with suitable bolts.

(4) Mounting. When mounting the pelican sampler on a handle, the mounting bolt ends should be peened over after the nuts have been tightened.

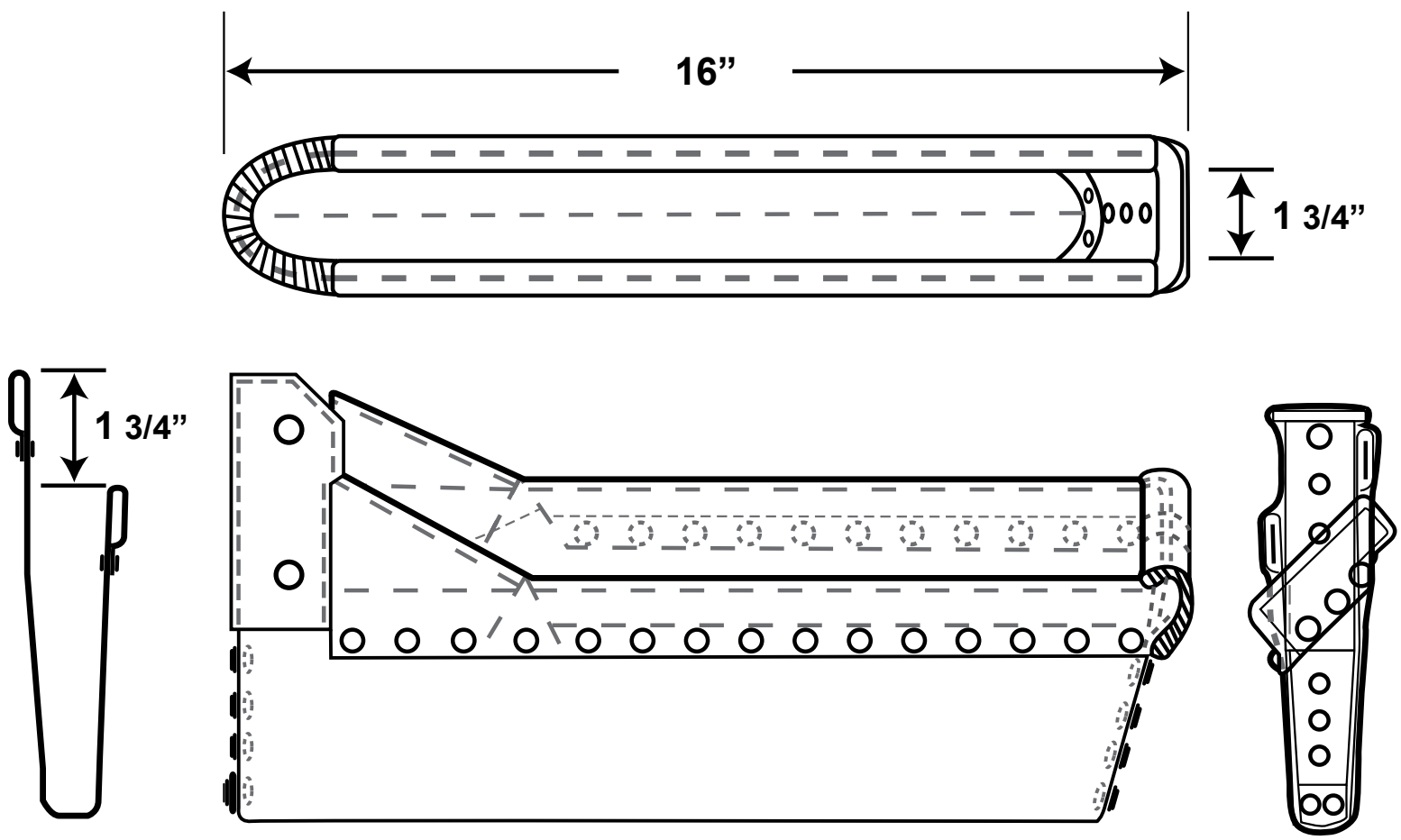

Figure 9. Pelican Sampler

7.8 DIVIDERS

Dividers are used to proportionately reduce large samples of grain, rice, beans, peas, and lentils to smaller representative portions to facilitate their inspection. For official purposes, only use dividers that are (l) a type and model approved by FGIS, and (2) maintained in good operating condition. Divider discharge quantities should be adjusted as necessary, to meet the manufacturers' designated target weights. There is no requirement to "test" the dividers, since there is little evidence that small deviation from target weights will affect the percentage of various components in the sample. Adjustment of quantities is for convenience of use.

a. Boerner Dividers.

(1) Description. Boerner dividers utilize alternating ducts and spaces to divide a sample while maintaining the representativeness of each portion.

Figure 10. Boerner Laboratory Divider

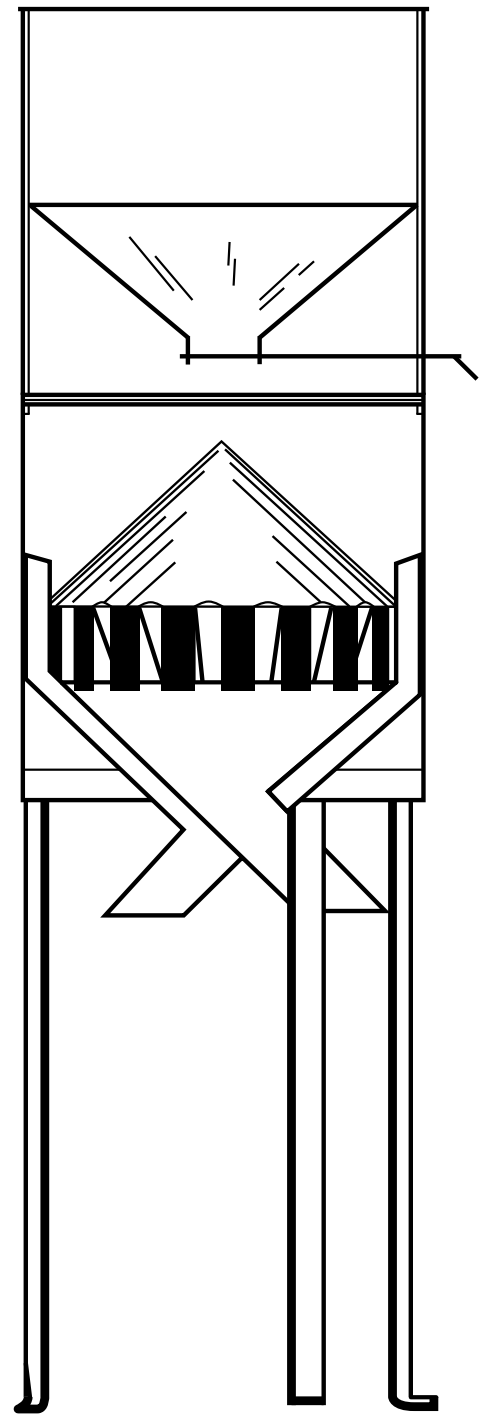

Figure 11. Boerner Cargo Divider (inside view)

b. Noise Reduction Modification.

(1) General. Excessive noise, caused by dividing corn and soybeans samples, can be reduced significantly by fitting a divider with acoustic material and a baffle. (Only Boerner-type dividers can be so modified at this time.)

(2) Preparation. Dividers are covered with a thin layer of clear enamel that must be removed prior to applying acoustic material.

(a) Disassemble the divider; remove the legs and hanger assemblies.

(b) Apply a thick coat of paint remover to all areas of the divider on which acoustic material will be attached. Do not strip enamel from areas that will not be covered with material.

CAUTION: When using paint remover, wear goggles and gloves, and ventilate the work area.

(c) Allow the paint remover to sit for 10 minutes, then wipe it off.

(d) Remove any remaining enamel with coarse steel wool, emery paper, or nylon scrub pads.

(e) Wash the divider with a mild cleanser and dry.

(f) Check the divider and rewash, if necessary.

NOTE: If the affected areas are not clean and enamel-free, the acoustic material will fall off.

(3) Application of Acoustic Material.

(a) Group each set of acoustic material with the part of the divider that will be covered by it.

(b) Before removing the paper backing, form each set of material around the pertinent part.

(c) Trim any excess material so that the material will fit properly.

(d) Remove the backing from the material and apply the material. When working on divider vanes, carefully center the material so that it does not disrupt the flow of material through the divider.

(e) Using a roller, push out any trapped air.

(f) Punch out holes in the acoustic material where the material is covering bolt holes.

(g) Reassemble the divider.

(4) Application of Baffle.

(a) Place the plastic ring over the top of the divider until it rests on the upper part of the divider body.

(b) Fit the plastic top over the ring. The top piece is designed to fit very snugly and only one way.

c. Rotary Dividers. Motorized rotary dividers utilize an internal rotor (drum) with cut-outs that lead to different spouts. Various arrangements of the drum cut-outs are available, yielding sample portions of the desired sizes.

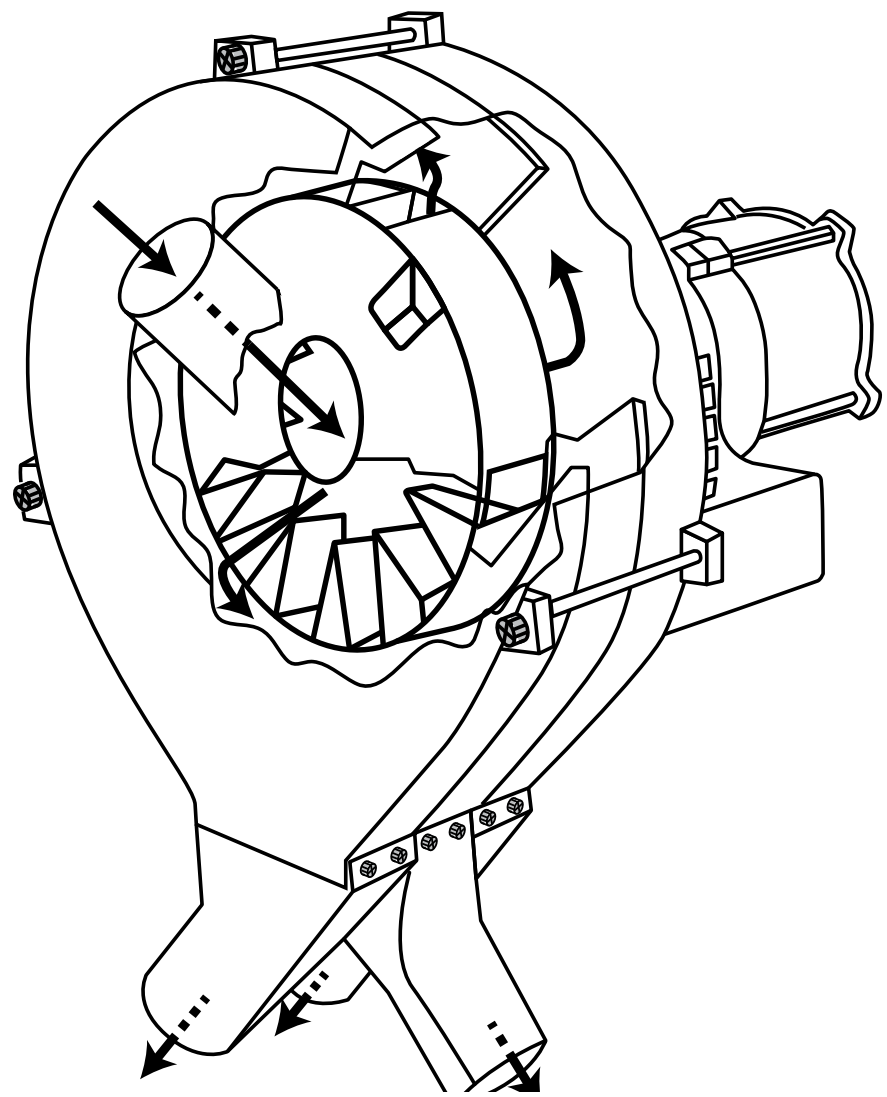

Figure 12. Rotary Divider (inside view)

d. Maintenance and Alignment. Dividers must be maintained in good operating condition. Check and adjust them prior to initial use and periodically thereafter, as needed. Each maintenance check shall encompass the following:

(1) Level Condition. Examine and, if necessary, adjust the divider so that it is level.

(2) Support. Check the table or desk on which the divider is mounted. If it is not stable, move the divider to another surface.

(3) Cone Alignment (Boerner-types only). Ensure that the peak of the cone is aligned with the center of the hopper.

(4) Cone Condition (Boerner-types only). Examine the tip of the cone; if a hole has developed, repair or replace the divider. Holes may be soldered closed or filled with epoxy putty.

(5) Valve Operation. Check the valve for ease of movement. Adjust or repair, if necessary.

(6) Cleanliness. Clean the divider vanes of any straw, seed pods, or other refuse that has accumulated.

e. Adjustments.

(1) General. Adjust each divider whenever necessary, to meet the manufacturer's designated target weights.

(2) Procedures.

(a) Prepare a 1000-gram sample of dockage-free wheat. When adjusting a 3- or 4-way divider use an appropriate amount, such as 1,200 grams, so target values are easy to calculate.

(b) Determine the target value for each pan (separation) of the divider by multiplying the fraction of the total sample that will be delivered to a particular separation of the divider times 1,000.

(c) Determine the allowable deviation for each separation of the divider by multiplying the target value times 0.01.

(d) Thoroughly clean the divider.

(e) Close the divider's hopper valve, pour in the sample, turn it on if motorized, and then open the hopper.

(f) After the sample has been completely divided, weigh each pan and record the weight. Use any approved scale.

(g) Repeat the trial two more times using the same sample.

(h) After performing the trial separation three times, average the results.

(i) For each side of the divider, determine the variation between the average test results and the target values. If the variation for all sides are within the allowable deviations, the division is acceptable.

NOTE: No record of adjustment needs to be kept on file, however it may be helpful to record the target values and allowable deviations on a worksheet.

(3) Vane Adjustment (Boerner-type only). The usual cause for incorrect division size is misaligned divider vanes. Adjustment of the vanes to provide for delivery of equal portions can be made by narrowing the openings leading to the “heavy” side of the divider. This is accomplished as follows:

(a) Determine which openings flow right and which flow left by dropping a kernel of grain into a selected opening and noting which pan collected the kernel.

(b) If the kernel of grain went into the left pan, mark the opening “Left” or “L.” Also mark every alternate opening around the circumference “Left” or “L.” If the kernel went into the right pan, mark the appropriate openings “Right” or “R”.

(c) Determine which side, right or left, is heavy (out of tolerance) by dividing a sample of known weight and then weighing the right and left pans.

(d) Gently pinch the vanes corresponding to the heavy side to decrease the size f the openings. A small adjustment to a few openings should produce the desired results. (To get the most uniform results, make a very small adjustment to all of the applicable openings around the entire circumference of the divider.)

(e) Check the divider and readjust, if necessary.

7.9 EXAMINATIONS

Give manual sampling devices a cursory examination prior to each use. In addition, thoroughly examine and check the operation of each manual sampling device and divider according to the testing schedule (periodic examinations) and whenever the accuracy is in question, including after all repairs (supplemental examinations). No record of these examinations is required.

CHAPTER 8
BARLEY PEARLERS

Contents

8.1 INTRODUCTION 2

8.3 MAINTENANCE AND ALIGNMENT 3

8.4 STANDARDIZATION 5

8.5 TESTING 6

8.1 INTRODUCTION

Barley pearlers are machines used to dehull barley in order to facilitate the determination of heat damaged kernels (major and minor) and kernel texture. For official purposes, only use barley pearlers that are (1) a type and model approved by FGIS; (2) maintained in good operating condition; (3) standardized prior to operating; and (4) tested and examined at the prescribed time, in the proper manner, and found to be within tolerance. The List of Approved Equipment is available on the GIPSA website.

NOTE: Barley pearlers that are used exclusively to dehull sunflower seeds need not be tested.

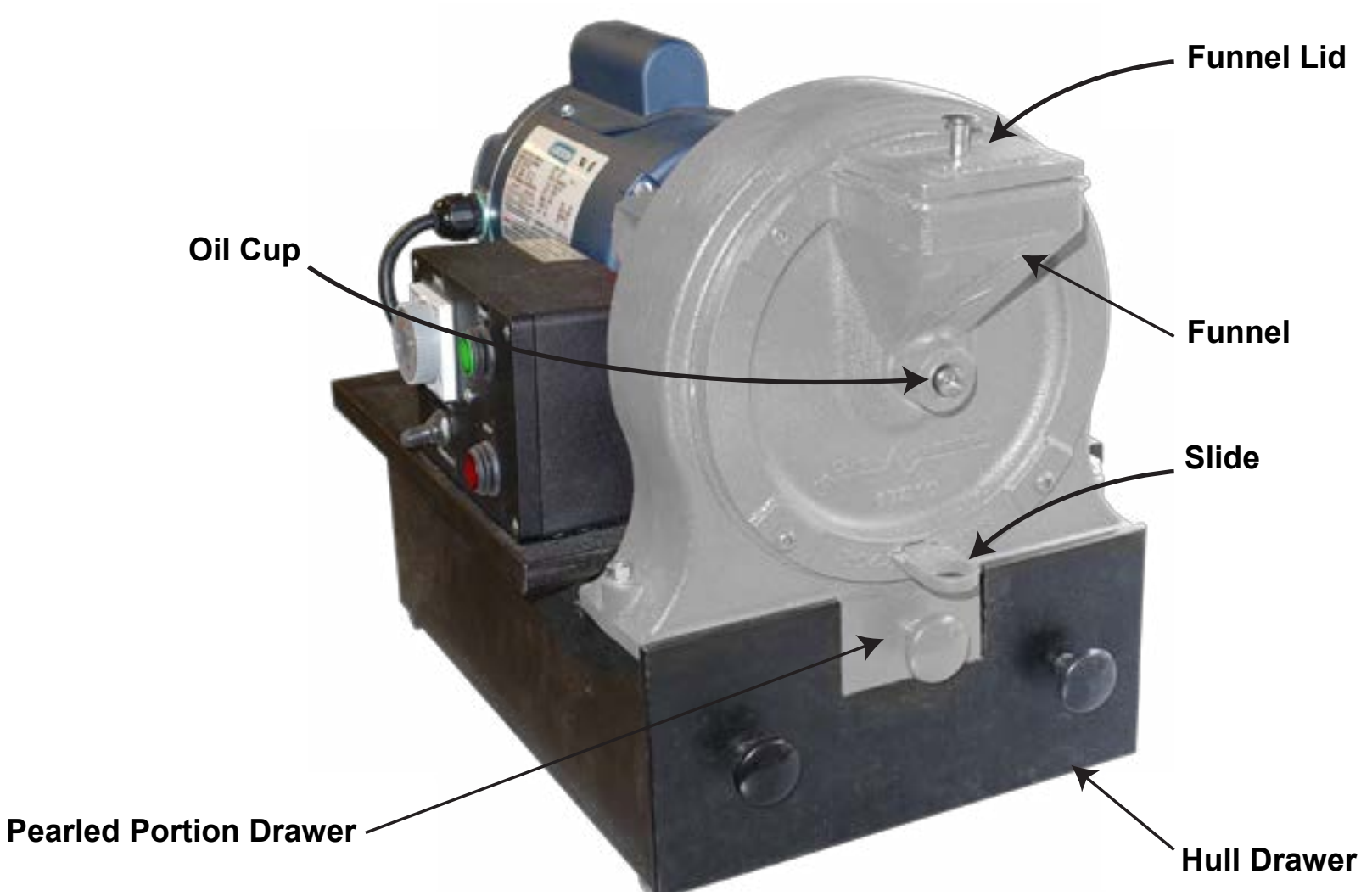

Figure 1. Barley Pearler

8.2 TOLERANCES

a. Timer Accuracy. For settings of 0 to 60 seconds…….. ± 5 seconds
61 to 90 seconds.....± 7 seconds
over 90 seconds.....± 10 seconds

b. Pearling Accuracy. ± 1.0 gram, mean deviation from the standard barley pearler using barley.

8.3 MAINTENANCE AND ALIGNMENT

Barley pearlers must be maintained in good operating condition. Check and adjust them prior to initial use and periodically thereafter, as needed. Each maintenance check shall encompass the following:

a. Pearler Bearing Oil Cups. Add I or 2 drops of light machine oil. Do not over lubricate.

b. Motor Shaft Coupling. Examine for slippage and wear. If excessively worn, replace the coupling; if slipping, tighten the Allen screws.

c. Motor Alignment with Wheel Shaft. Check alignment. If misaligned, loosen the motor mounting bolts and realign by adjusting the motor position.

d. Pearling Chamber Bearings. Check for wear. If excessively worn, replace the bearings.

e. Wire Mesh Screen. Check screen for proper size and imperfections. Only 8 x 8 mesh-per-inch, 18 gage screen shall be used. If it is not the proper size and free of imperfections, replace it.

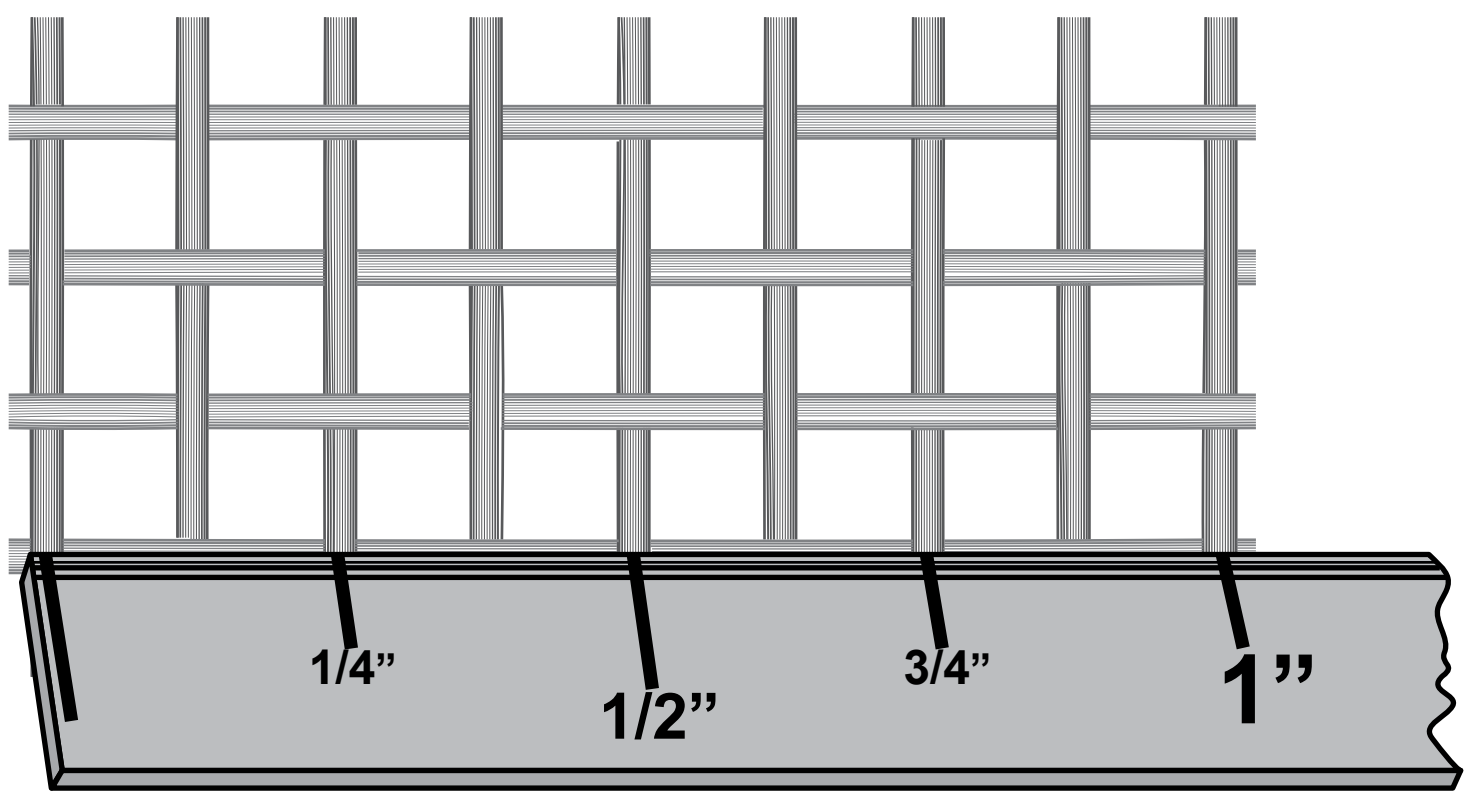

Figure 2. Eight Mesh-Per-Inch Screen

f. Centering of Wheel in Pearling Chamber. Check for proper centering by pearling a 50-gram portion of barley and listening for a “popping” sound during operation. If the sound is heard, the wheel is not properly centered. Adjust by loosening setscrews in motor shaft coupling, then center the wheel within the metal housing, and retighten.

g. Inner Surfaces of Funnel. Check for cleanliness and smoothness. If dirty, clean with a damp cloth. If rough, file or sand the surface to remove imperfections.

h. Slide Closure. Determine if the slide fits snugly by pearling a 50-gram portion of barley and looking for unhulled barley in with the pearled barley in the pearled portion drawer. If unhulled barley is found, realign the slide or refit.

i. General Operation. Listen to the pearler during its operation; it should be smooth and quiet. If noisy, recheck the aforementioned items.

j. Support and Power Cord. Check the support for stability and the cord for wear. The electrical wiring under the timer must be covered or otherwise guarded from accidental contact.

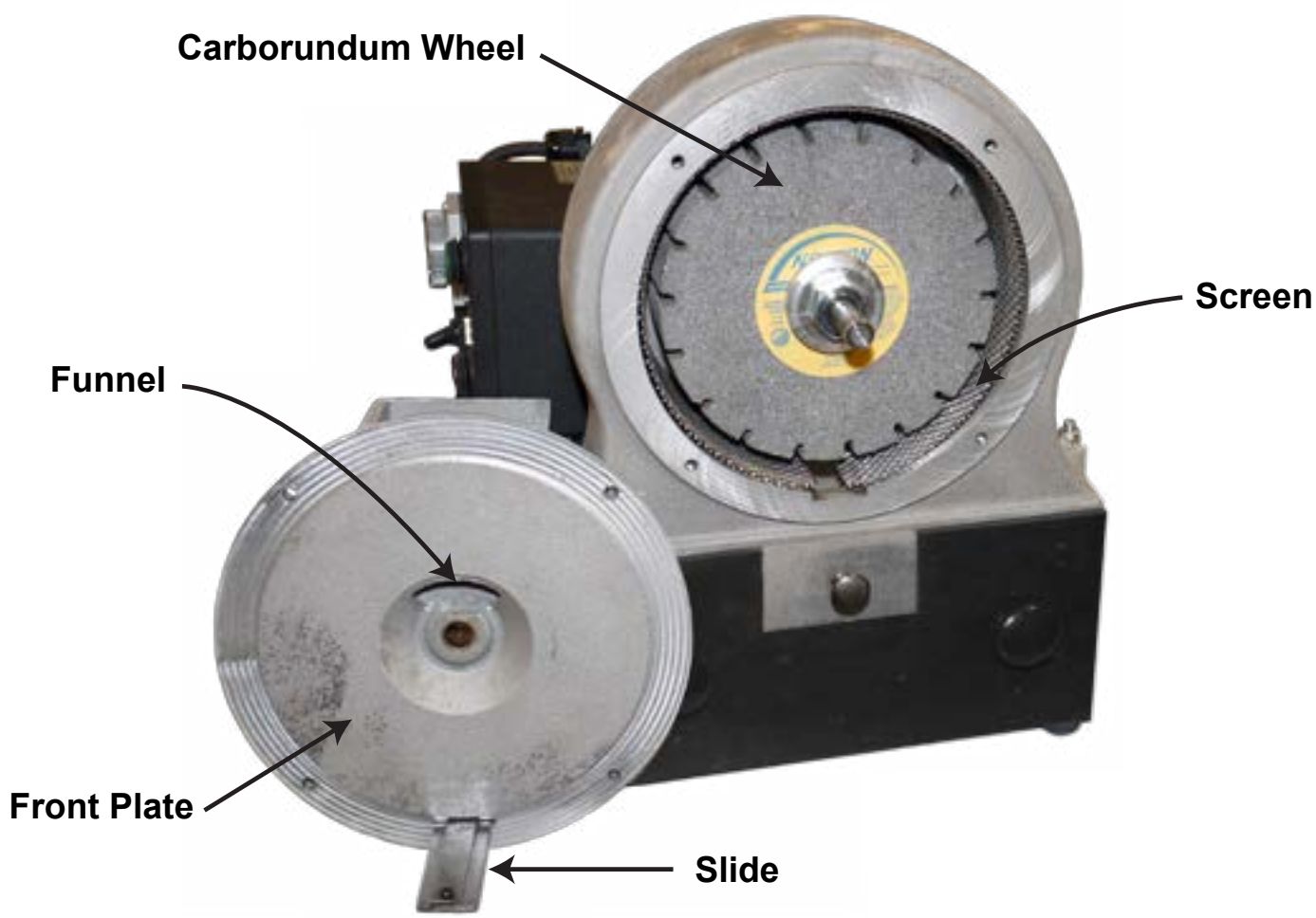

Figure 3. Pearling Chamber

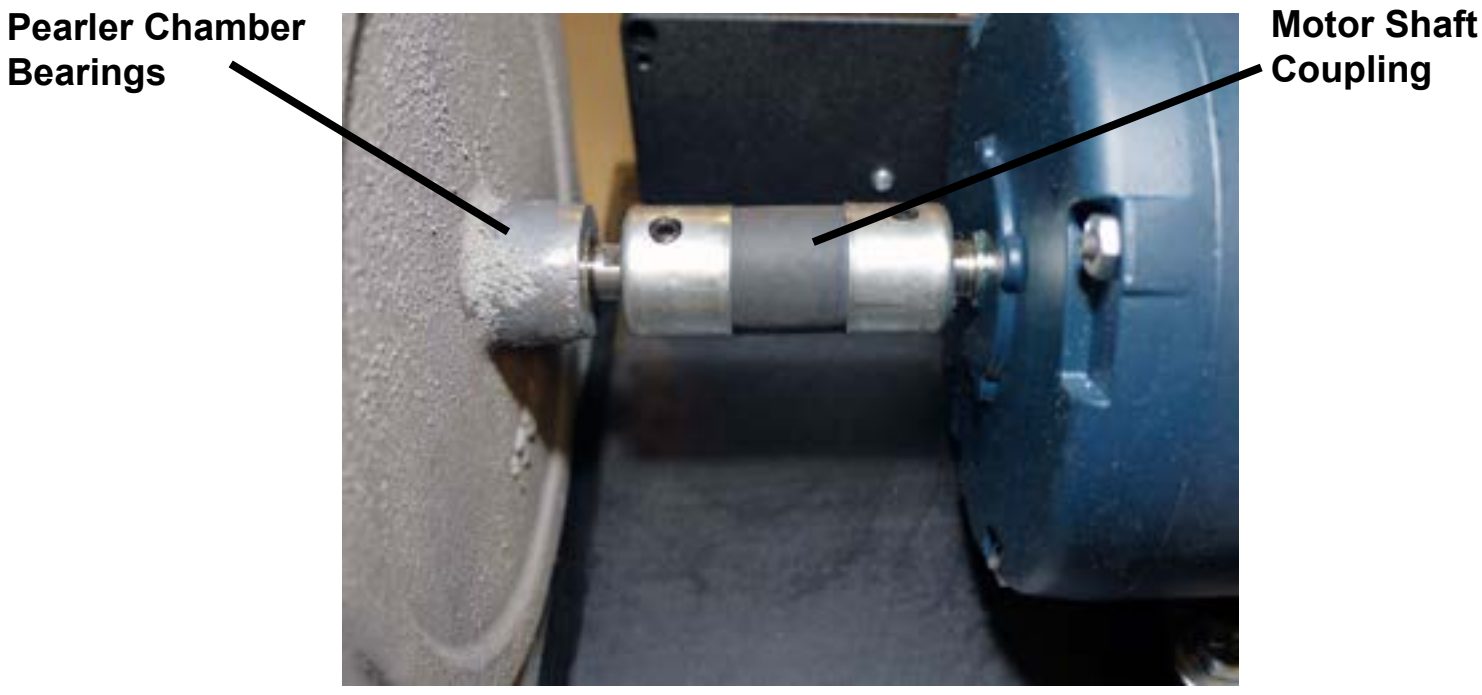

Figure 4, Motor Assembly

8.4 STANDARDIZATION

a. General. After the maintenance and alignment checks on a new pearler have been performed and all appropriate adjustments have been made, the pearler's standardized pearling time shall be established.

b. Standardization Procedures. To standardize a Field Office or agency device, the Field Office shall prepare two 50.00-gram samples. Two-rowed barley is preferred for standardization purposes because it is more uniform than six-rowed barley. However, if a good quality six-rowed barley is available, it may be used (i.e., sound kernels, recent crop, and fresh).

(1) Pearl one sample using the Field Office Standard as follows:

(a) Turn the pearler on and open the slide to ensure that the pearling chamber is empty. Then turn the pearler off. After the motor stops, remove and clean the hull and pearler drawers.

(b) Replace the drawers, pour the sample into the hopper, and then replace the hopper lid.

(c) Set the pearler for 2 minutes and activate. When the pearler has run for its standardized pearling time, pull out the slide, allow the pearled barley to drop into the drawer, then allow the machine to continue to run for the final time to clean the chamber.

(d) Weigh the pearled portion and note the results.

(2) Pearl the other sample using the new pearler as follows:

NOTE: The Carborundum wheel on new pearlers requires a conditioning period. To accomplish this, pearl 20 or more 50-gram portions for 2minutes each, then proceed with the standardization procedure.

(a) Pour the sample into the hopper and replace the lid.

(b) Set the pearler for 2 minutes and activate. When the pearler has run for l minute, pull out the slide and allow the pearled barley to drop into the drawer. Allow the machine to continue to run for the final minute to clean the chamber.

(c) Weigh the pearled portion and note the results. If the new pearler's pearled portion weighs within plus or minus 1 -gram of the results determined by the Field Office Standard, the new pearler is standardized.

If not, the pearling time should be adjusted by ¼ minute increments and retested until a time is established that will yield the correct weight. Increase the pearling time to decrease weight; decrease the pearling time to increase weight.

(3) After the standardized pearling time is established, record it on a 2-inch by 4-inch piece of paper and tape this to the pearler in a conspicuous place. The standardized pearling time assigned to pearlers shall be based on ¼ minute intervals; e.g., l ¼.

8.5 TESTING

a. General. Test each barley pearler according to the testing schedule (periodic tests) and whenever the accuracy of the pearler is in question, including after all repairs (supplemental tests).

b. Sample Preparation. The testing office (FGIS Headquarters, in the case of Field Office Standard pearlers, or the Field Office in the case of all other pearlers) shall prepare 50.00-gram, dockage and thin-free test samples from an identified lot of barley. One set of five test samples shall be provided for testing the pearler in question and the duplicate set of five samples shall be provided for testing by the Headquarters or Field Office Standard, as applicable. Each test sample shall be pearled in accordance with the test procedures.

c. Test Procedures.

(1) Testing the Pearler's Timer.

(a) Set the pearler's timer for its standardized time. Release the timer switch and simultaneously activate a stopwatch. When the timer stops, stop the stopwatch and note the time.

(b) If the time is in excess of the established tolerance, the timer shall be repaired or replaced. Out-of-tolerance timers shall not be retested unless, in the opinion of the testing office, action suitable to correct the problem has been taken.

(2) Testing the Pearling Accuracy.

(a) Thoroughly clean the pearler. Then, with the pearling chamber slide closed, pour a 50.00 -gram test sample into the pearling chamber and replace the funnel lid.

(b) Do not use the machine's timer in testing, except to start the pearler. Use a stopwatch for the timing of tests, since it is more accurate than the machine's timing device.

1 Set the timing device to run longer than the established pearling time and activate. Start the stopwatch simultaneously.

2 Pearling time starts when motor starts and ends when the slide gate is opened. The excess time set on the timer should ensure that the barley will clear the pearling chamber after the slide gate is opened. Take precaution that the slide gate does not vibrate open during the pearling process.

(c) When the pearling time ends, open the slide gate and allow the machine to continue to operate until the timer stops. After the pearler stops, remove the pearler drawer and the hull drawer. Weigh the pearled barley on a scale capable of indicating weight to 0.01 gram. Run the other 50.00 -gram samples in the same manner and record the three median results on FGIS-924. Drop the lowest and highest results.

(d) Upon entering results into the Equipment Capability Testing (ECT) database, FGIS Headquarters or the FGIS Field Office, as appropriate, shall evaluate the test results. If the average of the test results is within ± 1.0 gram of the average weight of the testing office Standard pearler's results, and the appearance of the test and Standard portions are the same, the pearler is acceptable.

(e) For the barley pearler, the office creating the samples creates the checktest record and then includes the unique identifier "TRN" with each sample. The user opens the TRN and enters the results. Upon submitting the record the user can see if results are within acceptable tolerances. Also there are processes currently in use to retest the original sample and the current chapter never mentions or addressing how to handle results that fail to meet tolerances.

CHAPTER 9
SIEVES

Contents

9.1 INTRODUCTION 2

9.2 TOLERANCES 2

9.3 MAINTENANCE 3

9.4 STANDARDIZATION 4

9.5 TESTING 5

9.6 HAND SIEVES 8

9.7 RICE SIZING PLATES 9

9.8 CARTER DOCKAGE TESTER SIEVES 10

9.9 INDENTED AND SPECIAL HOLE PERFORATIONS 11

9.10 SPECIFICATIONS FOR U.S. WOVEN WIRE SIEVES 12

9.11 PERFORATION DIAGRAMS 13

9.1 INTRODUCTION

Sieves aid in the inspection of grain, rice, peas, beans, hops, and processed commodities by separating material by size. For official purposes, only use sieves that are (l) a type and model approved by FGIS; (2) maintained in good operating condition; and (3) tested and examined at the prescribed intervals, in the prescribed manner, and found to be within tolerance. A list of approved equipment is available on the GIPSA website.

9.2 TOLERANCES

a. Design Requirements. The perforated metal and woven-wire cloth used in the fabrication of hand sieves, dockage tester sieves, rice sizing plates, and powdered commodity sieves must comply with the requirements stated in this chapter.

b. Grain Test (Sieving) Accuracy MDS[1]

	0.064 x 3/8 inch Wheat	5/64 x 3/4 inch Barley	5.5/64 x 3/4 inch Barley	6/64 x 3/4 inch Barley
Direct Method[2]	± 0.2 %	± 0.3 %	± 0.5 %	± 0.7 %
Exchange Method[3]	± 0.3 %	± 0.5 %	± 0.7 %	± 1.0 %

[1] Mean deviation from standard sieve results.

[2] Direct comparison method. An equipment testing procedure wherein transfer standards are tested at the same time and place to compare the performance of two or more units of the same inspection equipment. One unit of the equipment used in the test shall be standard inspection equipment.

[3] Sample exchange method. An equipment testing procedure wherein transfer standards are tested to compare the performance of two or more units of the same inspection equipment installed at different locations. One unit of the equipment used in the test shall be standard inspection equipment.

9.3 MAINTENANCE

Maintain sieves in good condition. Check, clean, and repair them prior to initial use and periodically thereafter, as needed. Check the following:

a. Cleaning. Thoroughly clean each sieve using warm water and detergent, and a soft bristle brush. Even a slight amount of oil on a new sieve will alter its results. Do not use a steel brush to clean sieves.

b. Sieve Straightening. Check hand sieve plates for bowing or looseness in the sieve frame. Either condition will prohibit the sieve from satisfactorily separating material in a sample.Tighten or eliminate the bow in hand sieve plates by placing the sieve upside down on a level surface and tapping the hem lightly with a hammer around its entire circumference.

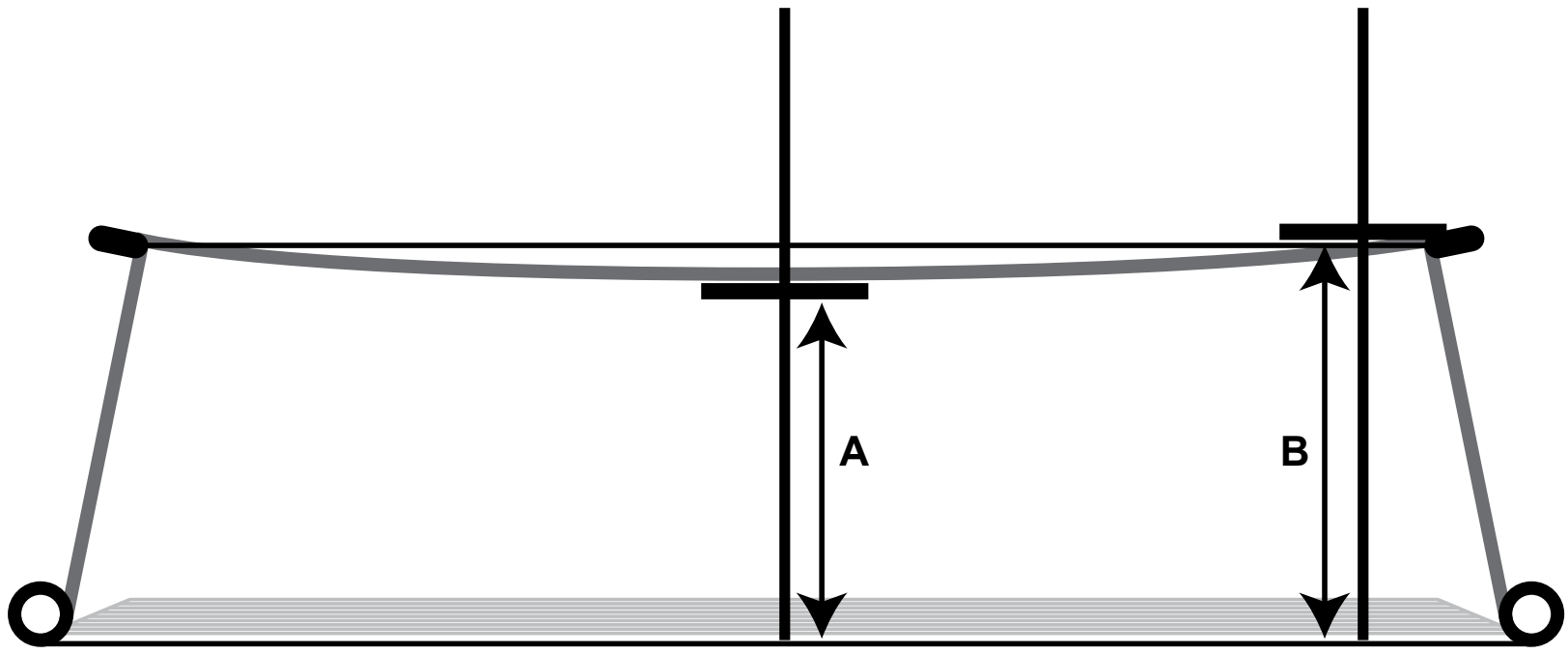

Figure 1. Measuring Sieve Bow

Measure the bow using a narrow steel rule or piece of wire as a depth gauge. Measure distance “a” at the center of the sieve, and distance “b” near the edge. The recommended difference of the measurements (b - a) is $\leq$ 3/16 inch.

c. Lodged Material. Inspect the sieves for lodged material and dislodge any material found. Perforated metal sieves, except for rice sizing plates, shall not be struck with the hand to dislodge material caught in the perforations. Free lodged material by running the palm of the hand over the underside of the sieve, forcing the lodged material through the upper side of the sieve perforations. Remove material lodged in rice sizing plates by striking the underside of the plate with a rubber mallet or flat board.

d. Storage. Store sieves in racks to prevent damage to the perforated metal.

9.4 STANDARDIZATION

The accuracy of newly perforated metal is determined by a standard referred to as a plug gauge and by visual examination. This examination is not normally performed by field personnel.

a. Plug Gauge. The gauge is a two-ended, feeler-type device with a “go” end 0.001 inch smaller than the “no go” end.

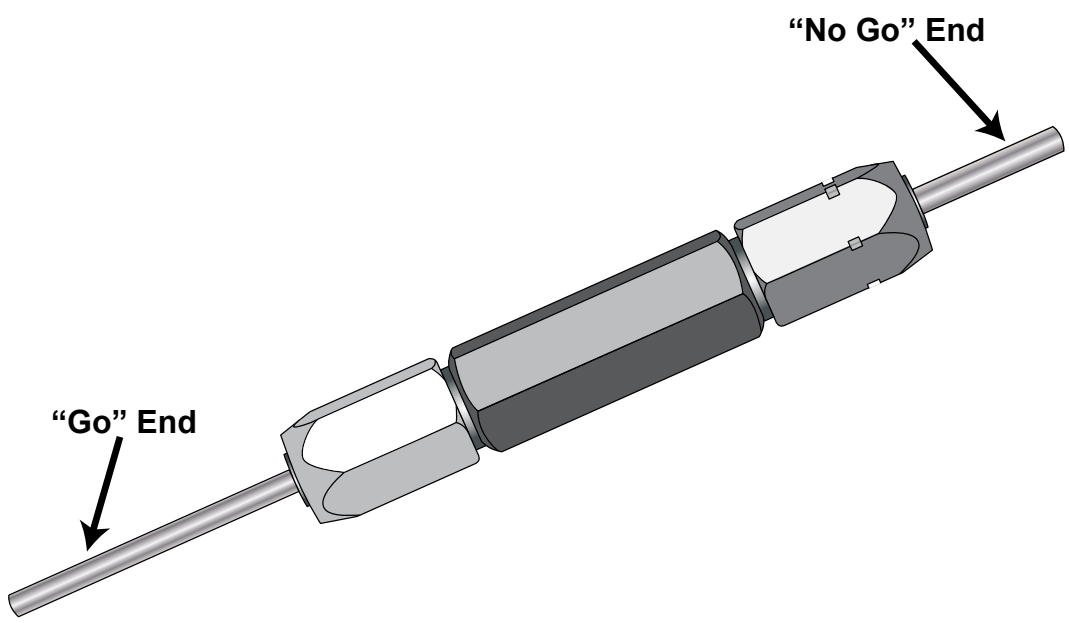

Figure 2. Plug Gauge

(1) For a given size perforation, a gauge is selected with a “go” end 0.0005 inch smaller than the perforation being measured.

(2) The “no go” end shall be 0.0005 inch larger than the perforation. In use, the “go” end should fit and the “no go” end should not fit each perforation.

(3) Only trained personnel shall use the plug gauges and then only on newly perforated metal.

b. Visual Examination. Factors such as perforation sharpness and bevel also affect sieve accuracy. Visually examine the sieve and ensure that the perforations do not appear too sharp or beveled.

9.5 TESTING

a. General.

(1) Test each wheat and barley hand sieve (0.064” x 3/8” oblong sieve, 5/64” x 3/4” slotted sieve, 5.5/64” x 3/4” slotted sieve, and 6/64” x 3/4” slotted sieve) according to the testing schedule (periodic tests), and whenever their accuracy is in question, including after all repairs (supplemental tests). New sieves are pre-tested before purchase do not require initial testing.

(2) Check that the mechanical grain sizer is in a true level condition with a spirit level placed on the sieve holder. The sizer must be level front-to-back and side-to-side. Use the leveler legs for this purpose.

(a) The sizer provides a horizontal stroke equal to 10 inches ± 0.25 inch, at approximately 68 complete cycles per minute, and has an automatic resetting counter with a range of 1 to 120 cycles.

(b) Oil the sprocket bearings and lower motor bushing twice yearly with a lightweight oil. The sieve holder slide rods may be lubricated with graphite or wiped with an oily cloth. Do not over-lubricate the rods, as dust may adhere to the rods or the sieve holder bearings.

(c) The roller chain may be lubricated with graphite or light grease. If needed, the drive chain may be adjusted by loosening the 3 cap screws on the motor mount and moving the motor. Do not tighten the chain too tight. Leave at least 1/4 inch slack from the edge of the chain guard.

b. Test Preparation.

(1) The testing office (FGIS Headquarters, in the case of Field Office Standard equipment, or the Field Office, in the case of all other equipment) shall prepare test samples of wheat or barley.

(2) Provide a set of samples (one sample for each sieve) to each office for testing the sieves.

(3) The testing office shall test the samples using the Headquarters Standard or Field Office Standard; next, place them in moisture-proof containers, and then, send them to the appropriate offices for testing.

(4) Each sample shall be tested in accordance with the test procedures.

Table 1 - Test Samples

Sieve	Sample	Approximate Composition	
0.064 x 3/8-Inch Oblong Sieve	250 grams of dockage-free wheat with 8.0 percent shrunken and broken kernels	230 g wheat	20 g thin
5/64 x 3/4-Inch Slotted Sieve	250 grams of dockage-free barley with 15.0 percent thin barley	212.5 g Bly	37.5 g thin
5.5/64 x 3/4-Inch Slotted Sieve	250 grams of dockage-free barley with 7.0 percent thin barley	232.5 g Bly	17.5g thin
6/64 x 3/4-Inch Slotted Sieve	250 grams of dockage-free barley with 20.0 percent thin barley	200 g Bly	50 g thin

NOTE: In order to obtain a reliable test, it is necessary that each test sample present a separation challenge to the sieve. If there are 20-50 kernels lodged in the sieve at the end of a test, it is a good indication that the sample is challenging the sieve.

c. Direct Comparison and Sample Exchange Test Procedures.

(1) Thoroughly clean the first sieve to be tested (and the Standard sieve, if applicable).

(2) Mix the test sample well.

(3) Pour the sample onto the center of the test sieve.

(4) Test the sieve by either the mechanical or hand method. The mechanical method is preferred.

(a) Mechanical Method. Align the perforations of the sieve so that they are parallel with the motion of the sizer. This alignment is extremely important to ensure an accurate test. Place gauging marks on the sizer, bottom pan, and sieves to aid in the alignment of the sieve with the motion of the sizer. Set the counter of the sizer for 30 strokes and then activate the sizer. Check the action of the sizer to ensure that it traverses 30 times.)

(b) Hand Method. Hold the sieve level in both hands directly in front of your body with elbows close to your sides. Hold the sieve so that the grain will move lengthwise with the perforations. In a steady sieving motion, move the sieve from right to left approximately 10 inches, and return from left to right to complete the operation. Repeat the operation 30 times.

(5) When the sample has been shaken 30 times, pour the material that passed through the sieve into a clean pan and set it aside for weighing.

(6) Then, pour the grain that remains on top of the sieve into a separate clean pan.

(7) Next, invert the sieve over its bottom pan and gently push the material lodged in it into the bottom pan.

(8) Pour the material from the bottom pan into the pan that contains the grain.

(9) Weigh the sieve separation on a precision-class scale (division size not more than 0.01 gram) and record the results on FGIS-924, Barley Pearler and Sieve Test.

(10) Combine the sample and separation and repeat the procedure (steps 3 through 9) two times. Record all readings on FGIS-924.

(11) For direct comparison testing only, after running the test sample through the test sieve three times, run the test sample through the Standard sieve three times (steps 2 through 9). Record the results on FGIS-924.

(12) If required, test other sieves in the same manner as the first. Record the results on FGIS-924.

(13) Determine the average percentage of the separations.

(14) Evaluation of Results.

(a) Direct Comparison. Complete FGIS-924, enter results into the Equipment Capability Testing (ECT) database, and compare the results of the test sieve to the results of the Standard sieve. If the mean deviation of the test results is within the allowable tolerance, the sieve(s) is acceptable.

(b) Sample Exchange.

1) After completing the tests, combine the sample and separation and place in a moisture-proof container identified by location and type of sieve.

2) Return the samples to FGIS Headquarters or the FGIS Field Office, as appropriate.

3) Upon entering results into ECT, FGIS Headquarters or the Field Office, as appropriate, shall complete their portion of ECT by recording their test results, and then comparing the results of the two tests. If the mean deviation of the test results is within the allowable tolerance, the sieve(s) is acceptable.

(15) In the case of out-of-tolerance sieves, document on FGIS-924 all pertinent facts and actions (including adjustments, retest, and follow-up actions).

9.6 HAND SIEVES

Perforation Size						Width		Shape	Center		End Bridges		Pattern
Inches			mm			Inches	mm		Inches	mm	Inches	mm	
----- Hand Sieves -----													
3/64	x	3/8	1.19	x	9.53	.0469	1.19	Oblong	0.125	3.18	0.055	1.40	End Stg
3/64	x	11/32	1.19	x	8.73	.0469	1.19	Oblong	1/8	3.18	0.055	1.40	End Stg
3.875/64	x	½	1.54	x	12.70	.0605	1.54	Slot	5/32	3.97	5/32	3.97	End Stg
.064	x	3/8	1.63	x	9.53	.064	1.63	Oblong	1/8	3.18	.0525	1.33	End Stg
4.5/64	x	½	1.79	x	12.70	.0703	1.79	Oblong	5/32	3.97	.0625	1.59	End Stg
5/64	x	15/32	1.98	x	11.91	.0781	1.98	Slot	9/64	3.57	5/32	3.97	End Stg
5/64	x	3/4	1.98	x	19.05	.0781	1.98	Slot	3/16	4.76	5/32	3.97	End Stg
5.5/64	x	3/4	2.18	x	19.05	.0859	2.18	Slot	3/16	4.76	5/32	3.97	End Stg
6/64	x	15/32	2.38	x	11.91	.0937	2.38	Slot	3/16	4.76	5/32	3.97	End Stg
6/64	x	3/4	2.38	x	19.05	.0937	2.38	Slot	3/16	4.76	5/32	3.97	End Stg
6.5/64	x	15/32	2.58	x	11.91	.1015	2.58	Slot	3/16	4.76	5/32	3.97	End Stg
8/64	x	3/4	3.18	x	19.05	.1250	3.18	Oblong	1/4	6.35	5/32	3.97	End Stg
9/64	x	3/4	3.57	x	19.05	.1406	3.57	Oblong	1/4	6.35	5/32	3.97	End Stg
10/64	x	3/4	3.97	x	19.05	.1562	3.97	Slot	9/32	7.14	5/32	3.97	End Stg
10/64	x	3/4	3.97	x	19.05	.1562	3.97	Oblong	5/16	7.94	5/32	3.97	End Stg
11/64	x	3/4	4.37	x	19.05	.1718	4.36	Slot	5/16	7.94	5/32	3.97	End Stg
12/64	x	3/4	4.76	x	19.05	.1875	4.76	Slot	5/16	7.94	5/32	3.97	End Stg
13/64	x	3/4	5.16	x	19.05	.2031	5.16	Slot	5/16	7.94	5/32	3.97	End Stg
14/64	x	3/4	5.56	x	19.05	.2187	5.55	Slot	0.125	11.11	5/32	3.97	End Stg
5/64		ins.circle	1.98			.0781	1.98	Tri	1/4	6.35	---	---	Single
.089		ins.circle	2.26			.0890	2.26	Tri	.134	3.40	---	---	Double
2.5/64			0.99					Round	.075	1.91			Stag.
4.5/64			1.79					Round	1/8	3.18			Stag.
4/64			1.59					Round	1/8	3.18			Stag.
5/64			1.98					Round	5/32	3.97			Stag.
1/12			2.12					Round	1/8	3.18			Stag.
5.5/64			2.18					Round	9/64	3.57			Stag.
6/64			2.38					Round	5/32	3.97			Stag.
6.5/64			2.58					Round	5/32	3.97			Stag.
7/64			2.78					Round	5/32	3.97			Stag.
8/64			3.18					Round	3/16	4.76			Stag.
9/64			3.57					Round	3/16	4.76			Stag.
10/64			3.97					Round	7/32	5.56			Stag.
12/64			4.76					Round	1/4	6.35			Stag.
14/64			5.56					Round	0.125	7.94			Stag.
15/64			5.95					Round	5/16	7.94			Stag.
16/64			6.35					Round	3/8	9.53			Stag.

Perforation Size						Width		Shape	Center		End Bridges		Pattern
Inches			mm			Inches	mm		Inches	mm	Inches	mm	
----- Hand Sieves -----													
17/64			6.75					Round	3/8	9.53			Stag.
24/64			9.53					Round	17/32	13.49			Stag.
28/64			11.11					Round	19/32	15.08			Stag.
30/64			11.91					Round	11/16	17.46			Stag.

Specifications for Perforated Metal Hand Sieves.

Kind & Quality of Metal: Sheet aluminum 3003 H 14

Thickness of Metal: No. 20 B&S gauge, decimal equivalent 0.032 inch (0.81 mm) plus or minus 0.0015 inch (0.04 mm).

Accuracy of Perforation: Precision - plus or minus 0.0005 inch (0.013 mm), Commercial - plus or minus 0.001 inch (0.025 mm).

Condition of Sieve Metal: Cleanly punched, and free from burrs and other surface imperfections

9.7 RICE SIZING PLATES

No.	Perforation Size		Width		Shape	Center		End Bridges		Pattern
	Inches	mm	Inches	mm		Inches	mm	Inches	mm	
	----RICE SIZING PLATES----									
5	.0781	**1.98**			**Round**	**5/32**	**3.97**			**Stag.**
6	.0940	**2.39**			Round	**5/32**	**3.97**			**Stag.**
0.135	.1350	**3.43**			**Round**	**3/16**	**4.76**			**Stag.**
10	.1563	**3.97**			Round	**1/4**	**6.35**			**Stag.**
12	.1875	**4.76**			Round	**1/4**	**6.35**			**Stag.**

Specifications for perforated metal rice sizing plates.

Kind & Quality of Metal: Sheet aluminum 5052 H 34

Thickness of Metal: No. l6 B&S gauge, decimal equivalent 0.05 inch plus or minus 0.0015 inch

Accuracy of Perforation: Precision - plus or minus 0.0005 inch

Condition of Sieve Metal: Cleanly punched, and free from burrs and other surface imperfections

9.8 CARTER DOCKAGE TESTER SIEVES

Perforation Size							Width		Shape	Center		End Bridges		Pattern
Inches				mm			Inches	mm		Inches	mm	Inches	mm	
No.	----- Carter Dockage Tester Sieves -----													
22	3-7/8 / 64	X	½	1.54	X	12.70	.0605	1.54	Slot	5/32	3.97	5/32	3.97	Stag.
4	.064	X	3/8	1.63	X	9.53	.0640	1.63	Oblong	1/8	3.18	.0525	1.33	Stag.
5	.070	X	½	1.78	X	12.70	.0700	1.78	Oblong	5/32	3.97	.0625	1.59	Stag.
23	4-7/8 / 64	X	3/4	1.93	X	19.05	.0760	1.93	Slot	3/16	4.76	5/32	3.97	Stag.
24	5/64	X	½	1.98	X	12.70	.0781	1.98	Slot	3/16	4.76	5/32	3.97	Stag.
25	6/64	X	½	2.38	X	12.70	.0937	2.38	Slot	3/16	4.76	5/32	3.97	Stag.
26	6-1/2 / 64	X	½	2.58	X	12.70	.1015	2.58	Slot	3/16	4.76	5/32	3.97	Stag.
6	5/64		ins. circle	1.98			.0781	1.98	Tri.	1/4	6.35			Single
8	.089		ins. circle	2.26			.0890	2.26	Tri.	.134	3.40			Double
1	2-1/2 / 64			0.99			.0391	0.99	Round	075	1.91			Stag.
7	4-1/2 / 64			1.79			.0703	1.79	Round	1/8	3.18			Stag.
2	5/64			1.98			.0781	1.98	Round	5/32	3.97			Stag.
20	6/64			2.38			.0937	2.38	Round	5/32	3.97			Stag.
27	6-1/2 / 64			2.58			.1016	2.58	Round	5/32	3.97			Stag.
21	7/64			2.78			.1093	2.78	Round	5/32	3.97			Stag.
3	12/64			4.76			.1875	4.76	Round	1/4	6.35			Stag.

9.9 INDENTED AND SPECIAL HOLE PERFORATIONS

Perforation Size							Width		Shape	Center		End Bridges		Pattern
Inches				mm			Inches	mm		Inches	mm	Inches	mm	
No.	----- Indented and Special Hole Perforations -----													
30	7/64			2.78			.1093	2.78	Round	13/16	20.64			Stag.
28	9/64			3.57			.1406	3.57	Round	13/16	20.64			Stag.
29	9-1/2 / 64			3.77			.1484	3.77	Round	13/16	20.64			Stag.
31	10/64			3.97			.1562	3.97	Round	13/16	20.64			Stag.
9	.070	X	½	1.78	X	12.70	.070	1.78	Oblong	5/32	3.97			Stag.
	1/12			2.12			.0833	2.12	Round	1/8	3.18			Stag.
9	.070	X	½	1.78	X	12.70	.070	1.78	Slotted	5/32	3.97			Even
	1/12			2.12			.0833	2.12	Round	1/8	3.18			Stag.

Specifications for perforated metal Carter Dockage Tester Sieves.

Kind & Quality of Metal: Sheet aluminum 3003 H 14

Thickness of Metal: No. 20 B&S gauge, decimal equivalent 0.032 inch plus or minus 0.0015 inch.

Accuracy of Perforation: Precision - plus or minus 0.0005 inch (0.013 mm), Commercial - plus or minus 0.001 inch (0.025 mm).

Condition of Sieve Metal: Cleanly punched, and free from burrs and other surface imperfections

9.10 SPECIFICATIONS FOR U.S. WOVEN WIRE SIEVES

Designation		Opening		Normal Wire Diameter	
Standard	Alternate	mm	inch	mm	inch
45.3 mm	1 3/4 inch	45.3	1.75	4.85	0.1909
38.1	1 1/2	38.1	1.50	4.59	0.1805
32.0	1 1/4	32.0	1.25	4.23	0.1665
26.9	1.06	26.9	1.06	3.90	0.1535
25.4	1	25.4	1.00	3.80	0.1496
22.6	7/8	22.6	0.875	3.5	0.1378
19.0	3/4	19.0	0.750	3.3	0.1299
16.0	5/8	16.0	0.625	3.00	0.1181
13.5	.530	13.5	0.530	2.75	0.1083
12.7	1/2	12.7	0.500	2.67	0.1051
11.2	7/16	11.2	0.438	2.45	0.0965
9.51	3/8	9.51	0.375	2.27	0.0894
8.00	5/16	8.00	0.312	2.07	0.0815
6.73	.265	6.73	0.265	1.87	0.0736
6.35	1/4	6.35	0.250	1.82	0.0717
5.66	№ 3 1/2	5.66	0.223	1.68	0.0661
4.76	4	4.76	0.187	1.54	0.0606
4.00	5	4.00	0.157	1.37	0.0539
3.36	6	3.36	0.132	1.23	0.0484
2.83	7	2.83	0.111	1.10	0.0430
2.38	8	2.38	0.0937	1.00	0.0394
2.00	10	2.00	0.0787	0.900	0.0354
1.68	12	1.68	0.0661	0.810	0.0319
1.41	14	1.41	0.0555	0.725	0.0285
1.19	16	1.19	0.0469	0.650	0.0256
1.00	18	1.00	0.0394	0.580	0.0228
841 micron	20	0.841	0.0311	0.510	0.0201
707	25	0.707	0.278	.450	0.0177
595	30	0.595	0.234	.390	0.0154
500	35	0.500	0.0197	.340	0.0134
420	40	0.420	0.0165	.290	0.0114
354	45	0.354	0.0139	.247	0.0097
297	50	0.297	0.0117	.215	0.0085
250	60	0.250	0.0098	.180	0.0071
210	70	0.210	0.0083	.152	0.0060
177	80	0.177	0.0070	.131	0.0052
149	100	0.149	0.0059	.110	0.0043
125	120	0.125	0.0049	.091	0.0036
105	140	0.105	0.0041	.076	0.0030
88	170	0.088	0.0035	.064	0.0025
74	200	0.074	0.0029	.053	0.0021
63	230	0.063	0.0025	.044	0.0017
53	270	0.053	0.0021	.037	0.0015
44	325	0.044	0.0017	.030	0.0012
37	400	0.037	0.0015	.025	0.0010

9.11 PERFORATION DIAGRAMS

Figure 3. Slotted, End Staggered

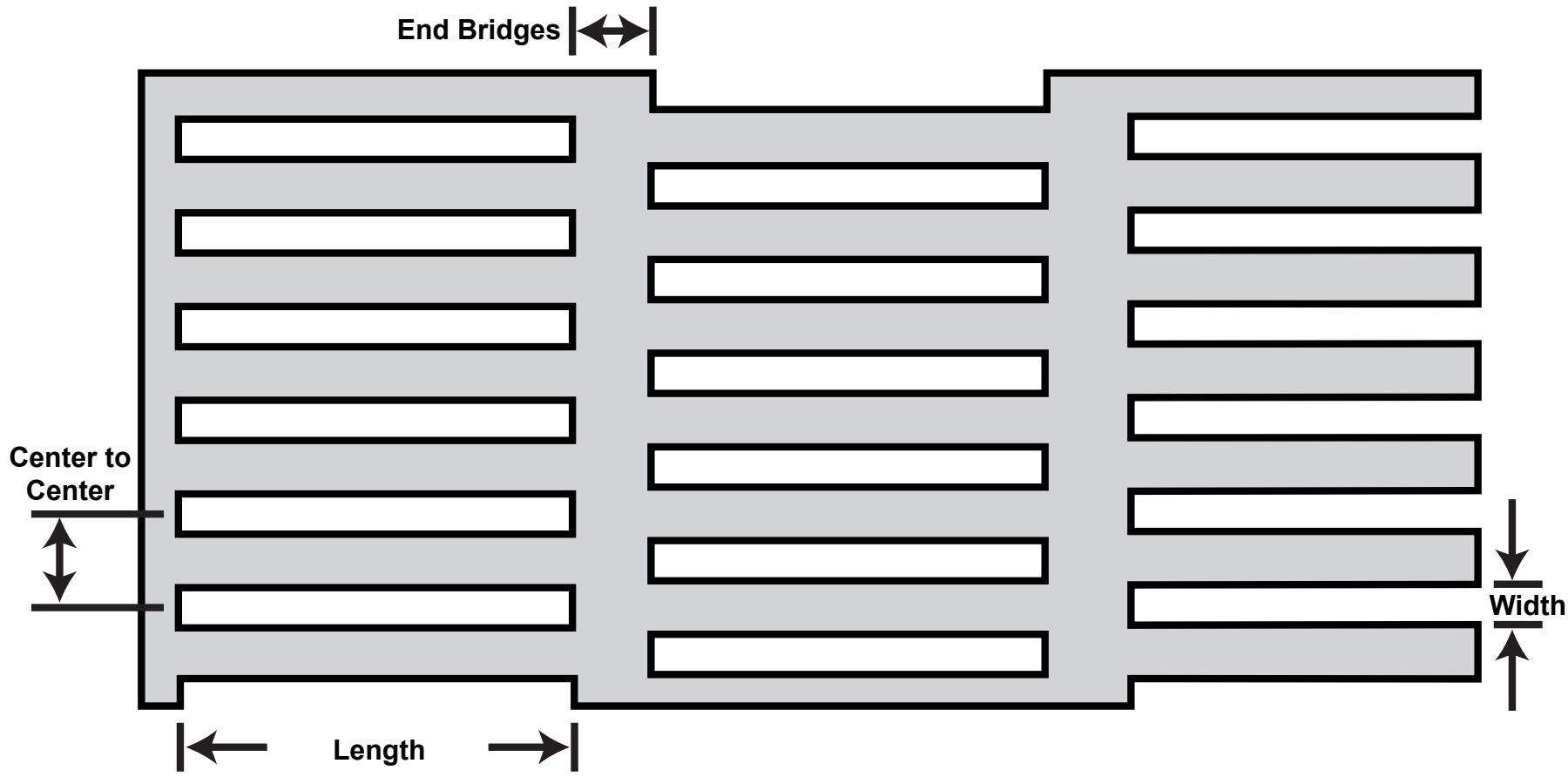

Figure 4. Oblong, End Staggered

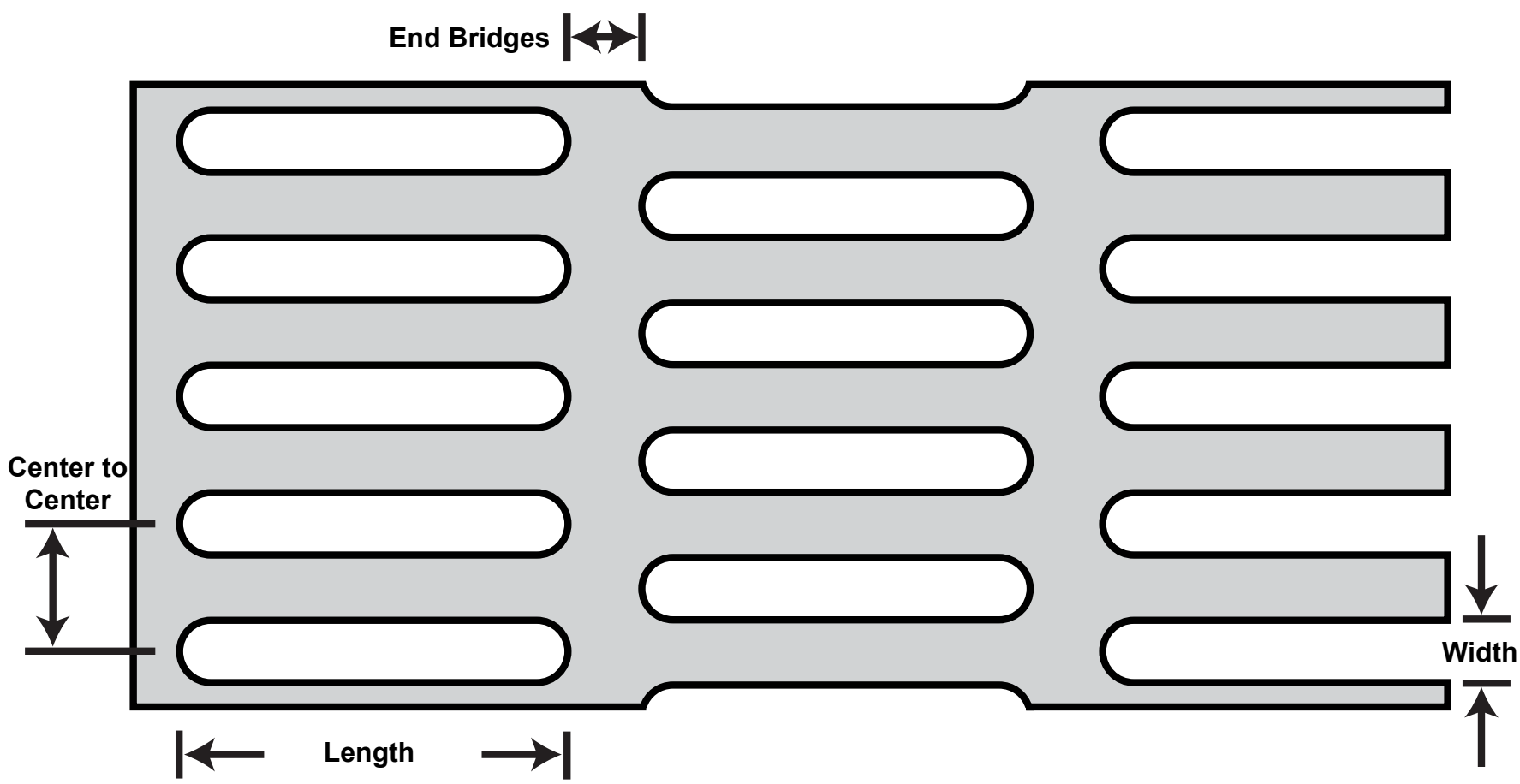

Figure 5. Triangular Single

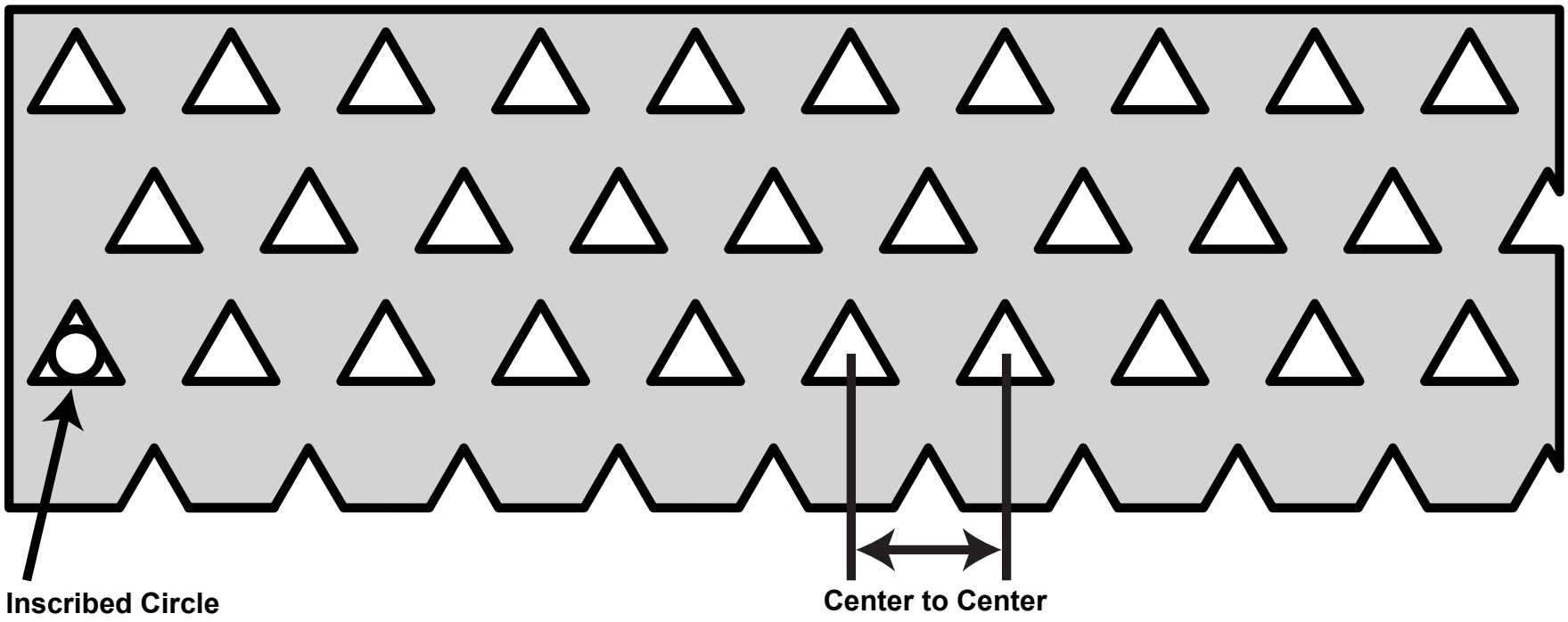

Figure 6. Triangular Double

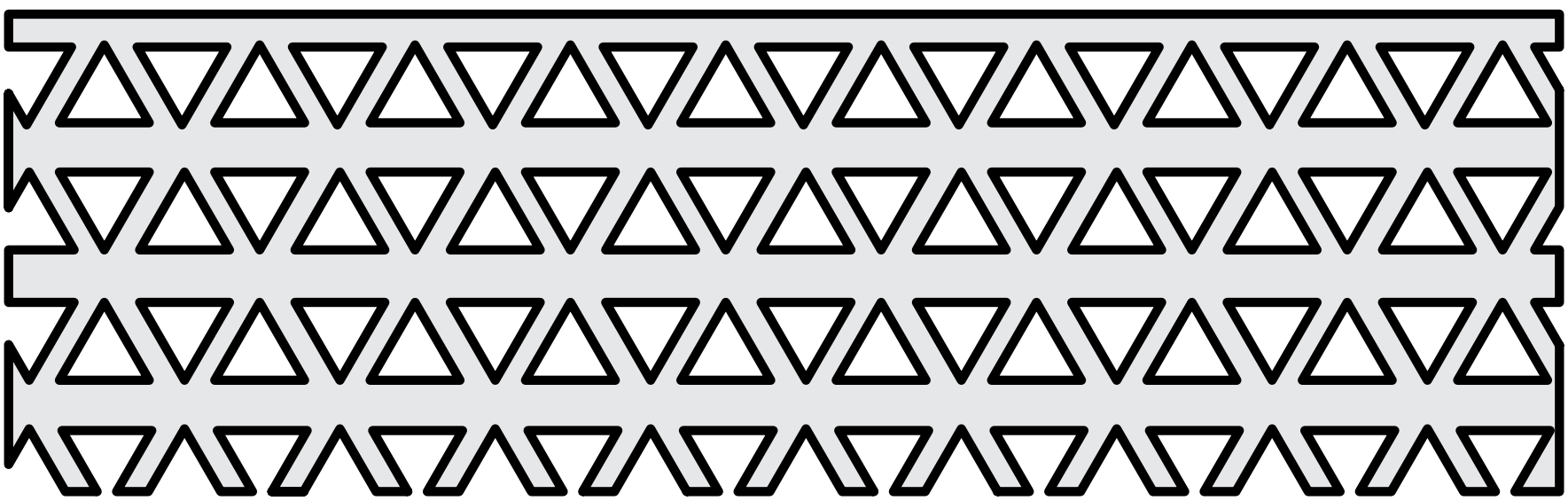

Figure 7. Round-hole Staggered

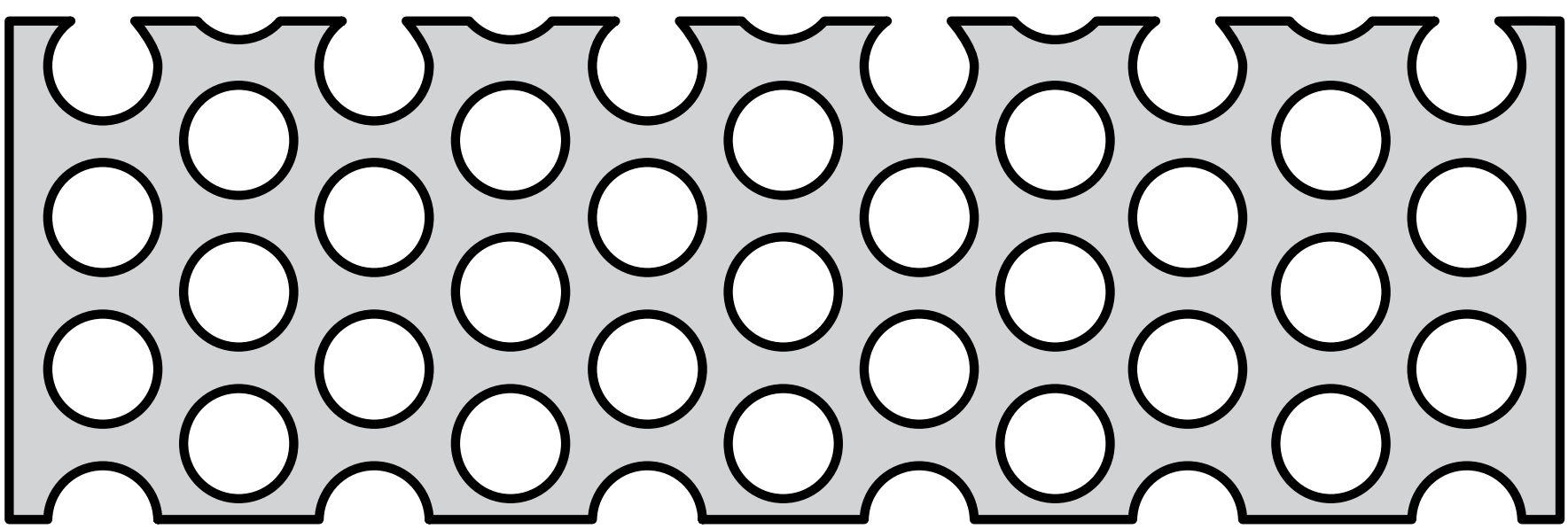

Figure 8. Indented Perforation

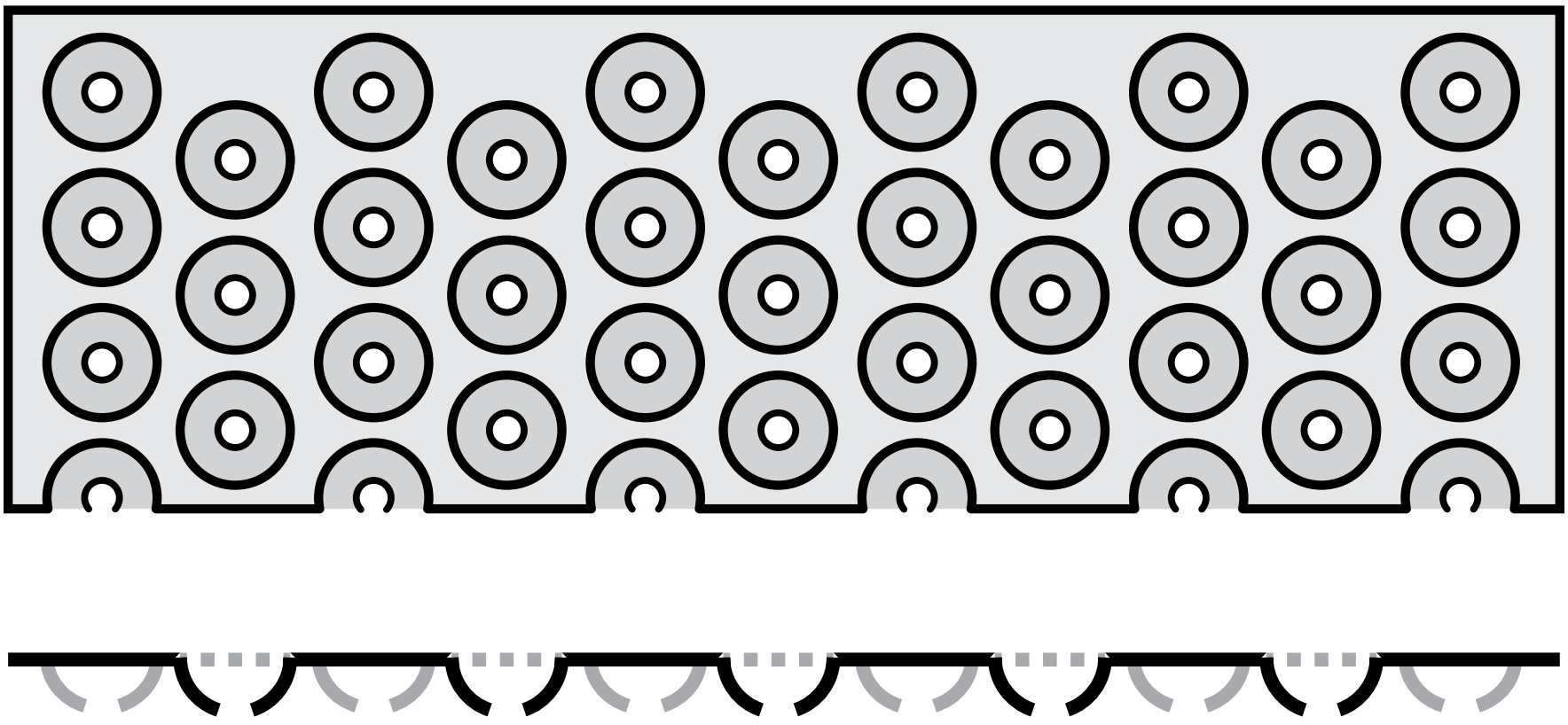

CHAPTER 10
REVISION HISTORY

Contents

Change No: 3 August 3, 2016 2

Change No: 2 February 20, 2002 2

Change No: 1 October 4, 1996 2

Change No: 3 August 3, 2016

Entire Handbook was Updated and Reissued

Change No: 2 February 20, 2002

The Equipment Handbook was revised to reflect a change in the requirements for official grain test scales. The requirements for scale division sizes are now based upon the size of the work portion to be analyzed. A wider range of scales is now acceptable for use, and this is reflected in the revised Approved Equipment List.

Change No: 1 October 4, 1996

Entire Handbook was Updated and Reissued